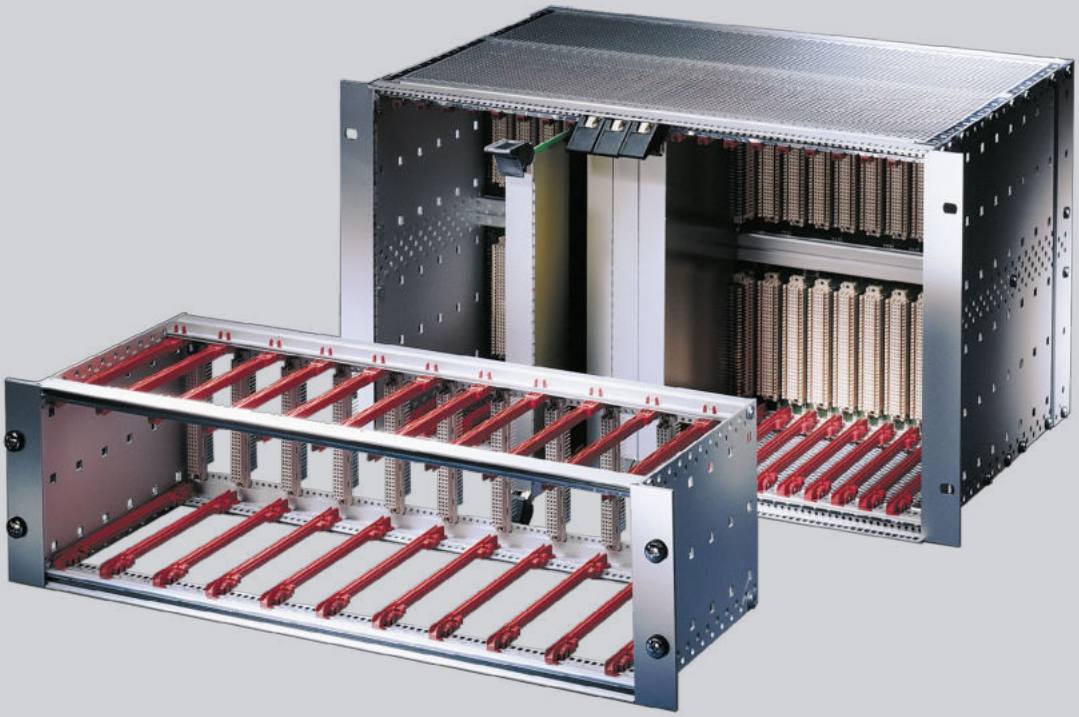

CONNECT AND PROTECT

EuropacPRO

04/2025

nVent SCHROFF

Subracks – EuropacPRO

OVERVIEW

MAIN KATALOG

Cabinets 1

Wall mounted cases 2

Accessories for cabinets and wall mounted cases . . 3

Climate control . . 4

Electronics cases 5

Subracks/ 19" chassis 6

Front panels, plug-in units 7

Systems 8

Power supply units 9

Backplanes 10

Connectors, front panel component system 11

Appendix 12

06197001

06112014

Different horizontal rails for various applications

131935928

The IEEE handles and shielded front panels are designed for the construction of CompactPCI and VME64x subrack systems

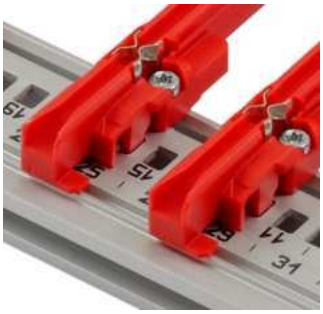

136815553

Sequential numbering on horizontal rails (> 28 HP) and markings onthe guide rails provide quick optical positioning aids.
ESD clips can be used at front or rear, to protect electronics from electrostatic discharge

STANDARDS/CERTIFICATIONS

- Inner and outer dimensions meet:
  IEC 60297-3-100, -101, - 102, -103, -104, -105
  IEEE 1101.1 and IEEE 1101.10/11
- Type of protection IP 20 to IEC 60529
- EMC testing to IEC 61587-3 (3GHZ) and IEC 61000-5-7 (40GHz)
- Shock and vibration test reports:
  German "Bahn" standards BN 411002, BN 411003;
  NF F 60002, NF F 67012
  IEC 61587-2, EN 50155, part 12.2.11
- Safety Requirements IEC 62368-1
- Plastic parts: Improved fire safety properties, fulfills EN 45545-2 requirement sets R22, R23 and R24 with HL3,
  "Halogen-Free", according to IEC 61249-2-21
- Nuclear plants KTA 1401

EMC CURVE

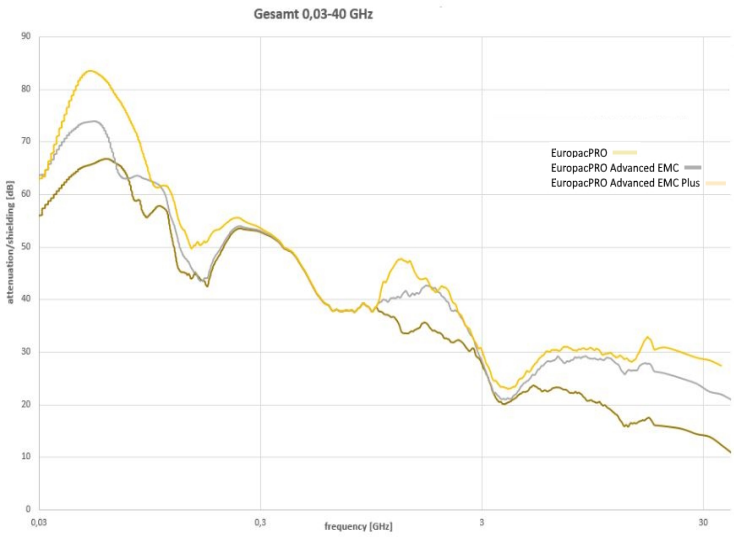

Subracks – EuropacPRO

OVERVIEW

19" SUBRACKS

- **Kits or individual configuration**
- **One product and accessories platform for every kind of customer requirement and application**
- **Suitable for CompactPCI and VME64x insertion and extractor handles**
- **EMC shielding can easily be retrofitted if needed**
- **Shock and vibration resistant up to 5 g**
- **3D PDF or CAD 3D data available for free download**

134592766 128288068

KITS

- All required parts available under one order number, some pre-fitted
- Most popular dimensions and versions available from stock
- For installed loads up to 7.5 kg, up to 11 kg and up to 15 kg
- As unshielded or shielded version
- Supplied as space-saving flat-pack

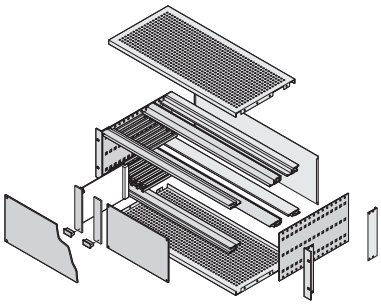

06105058

SERVICEPLUS INDIVIDUAL CONFIGURATION

- Single parts may individually be configured, respectively assembled on request (from quantity 1)
- Very wide range of variants in heigth, width and depth
- Guide rails for different applications
- EMC shielding material to improve EMC performance
- Interior assembly options with mounting plate or combined mounting (3U and 6 U segments)
- Other accessories and assembly kits

SERVICEPLUS

e.g. individual configuration and assembly
e.g. modification (cut-outs)
e.g. downloads (CAD drawings, user manuals, test reports)
e.g. custom solutions

Overview 6.6

Introduction. . . . 6.4

Kits
Light 6.6
Flexible 6.7
Heavy 6.12
Advanced EMC . . . 6.14
Advanced EMC PLUS 6.16
CompactPCI. 6.18

ServicePLUS configuration
Side panels 6.21
Horizontal rails, threaded inserts, perforated strips . 6.30
Guide rails 6.39
Cover plates 6.48
EMC Cover plates . 6.49
EMC shielding . . . 6.62
Interior assemblies. 6.66
Assembly kits 6.73

Application examples 6.79

Subracks for mobile railway applications 6.70

europacPRO for industrial applications 6.86

europacPRO for rugged applications 6.92

Subracks – EuropacPRO

KIT, "LIGHT", UNSHIELDED, FOR BACKPLANE MOUNTING

134592760

Photo: 3 U subrack

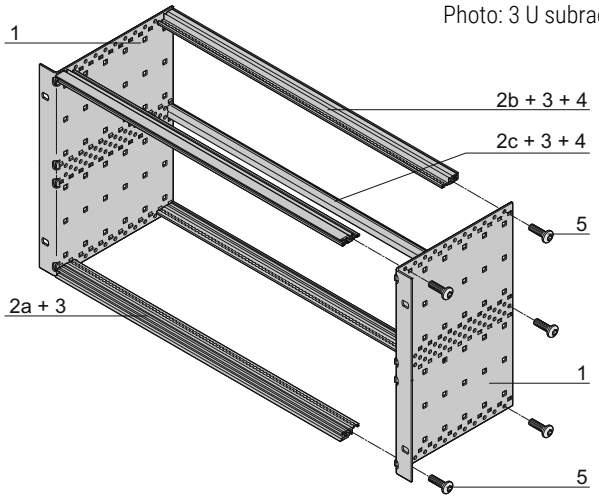

06111056

6 U

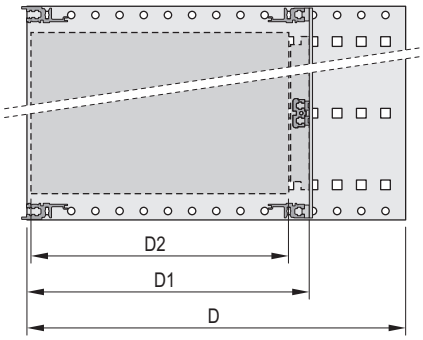

06108051

D = overall depth, D1 = insertion depth,
D2 = board depth = D1 - 15 mm

04400001

Rear horizontal rail for backplane mounting with insulation strip

- Subrack with side panel type L ("light") with firmly fixed 19" brackets
- Rear horizontal rails for backplane mounting with insulation strip
- Installed load up to 7.5 kg
- Cost-optimised

DELIVERY COMPRISES (Kit)

Item	Qty 3 U	Qty 6 U	Description
1	2	2	Side panel type L, Al, 2 mm, passivated, with built-in 19" support bracket
2a	2	2	Front horizontal rail (L-KD)
2b	2	2	Rear horizontal rail (L-ST)
2c	-	1	Rear horizontal rail centre (ST)
3	4	6	Threaded insert, front and rear (pre-fitted)
4	2	4	Insulation strip (pre-fitted)
5	1	1	Fixing material kit, user manual

ORDER INFORMATION

Height U	Width HP	Depth D mm	Depth D1 mm	Part no.
3	84	175	175	**24564-131**
3	84	235	175/235	**24564-132**
3	84	295	175/235/295	**24564-133**
6	84	175	175	**24564-431**
6	84	235	175/235	**24564-432**
6	84	295	175/235/295	**24564-433**

Accessories

19" assembly kit (screw, washer, nut) (8 × screws, 8 × plastic washers, 8 × cage nuts)	**21100-435**
Trims for side panels Type (19" angle) type L, 3 U, packaging unit 1 piece	**34561-197**
Trims for side panels Type (19" angle) type L, 6 U, packaging unit 1 piece	**34561-497**
Sleeves PPO, black, to fix top cover to side panel, PU 100 pieces	**21100-565**
Collar screw with slot M6 x 16, St, nickel-plated, PU 100 pieces	**21100-566**

Guide rails (standard), ESD clips

Depth D2 mm	Qty/PU piece	Part no.
160	10	**24568-361**
220	10	**24568-362**
280	10	**24568-379**
ESD clips for guide rails PU 50 pieces		**24560-255**

Cover plates for insertion in horizontal rails (type L)

Depth D2 mm	Width HP	Qty/PU piece	Part no.
160	84	2	**24561-051**
220	84	2	**24561-052**

NOTE

- Subrack is not prepared for shielding

Subracks – EuropacPRO

KIT, "FLEXIBLE", UNSHIELDED, FOR CONNECTOR MOUNTING

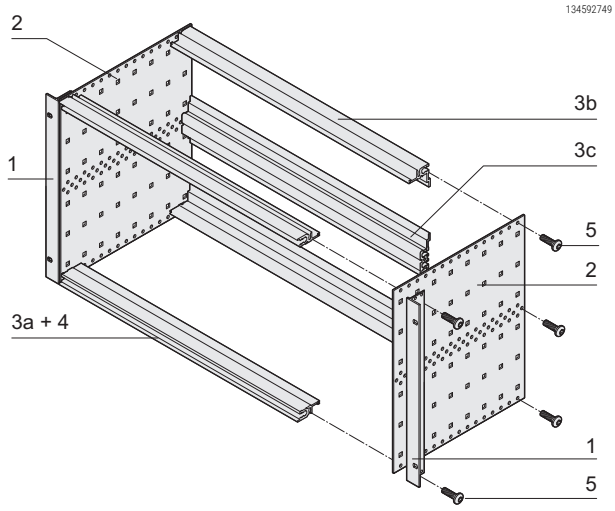

6 U

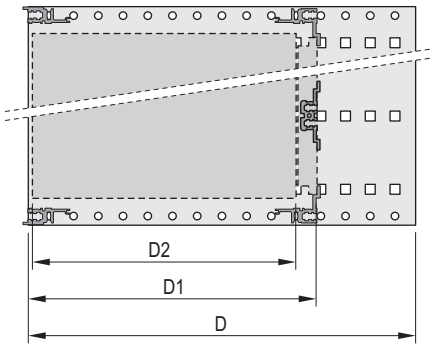

D = overall depth, D1 = insertion depth,
D2 = board depth = D1 - 15 mm

Horizontal rail to rear for connector mounting

- Subrack with side panel type F ("flexible"), 19" bracket is depth-adjustable
- Rear horizontal rails for connector mounting (IEC 60603-2 / DIN 41612)
- Installed load up to 11 kg

DELIVERY COMPRISES (kit)

Item	Qty 3 U	Qty 6 U	Description
1	2	2	19" support bracket, Al extrusion, for EMC gasket (St, stainless)
2	2	2	Side panel type F, Al, 2 mm
3a	2	2	Front horizontal rail (L-KD)
3b	2	2	Rear horizontal rail (L-MZ) for connector mounting
3c	-	1	Centre horizontal rail (MZ)
4	2	2	Threaded insert to front (pre-fitted)
5	1	1	Fixing material kit, user manual

ORDER INFORMATION

Height U	Width HP	Depth D mm	Depth D1 mm	Part no.
3	84	175	175	**24563-191**
3	84	235	175/235	**24563-192**
3	84	295	175/235/295	**24563-193**
3	84	355	175/235/295/355	**24563-194**
6	84	175	175	**24563-491**
6	84	235	175/235	**24563-492**
6	84	295	175/235/295	**24563-493**
6	84	355	175/235/295/340	**24563-494**

Accessories

19" assembly kit (screw, washer, nut) (8 × screws, 8 × plastic washers, 8 × cage nuts)	**21100-435**

Guide rails (standard), ESD clips

Depth D2 mm	Qty/PU piece	Part no.
160	10	**24568-361**
220	10	**24568-362**
280	10	**24568-379**
340	10	**24568-380**
ESD clip for guide rails PU 50 pieces		**24560-255**

Cover plates for insertion in horizontal rails (type L)

Depth D2 mm	Width HP	Qty/PU piece	Part no.
160	84	2	**24561-051**
220	84	2	**24561-052**

Part number in bold face type: ready for despatch within 2 working days
Part number in normal type: ready for despatch within 10 working days

Subracks – EuropacPRO

KIT, "FLEXIBLE", UNSHIELDED FOR CONNECTOR, ASSEMBLY ON SLIDE RAIL

134592749

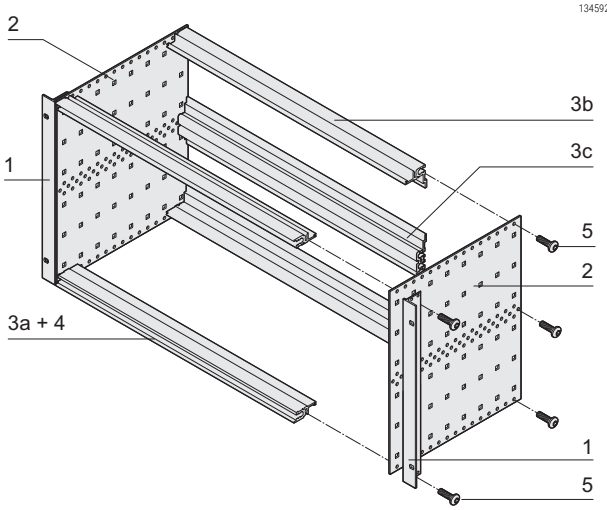

06105054

6 U

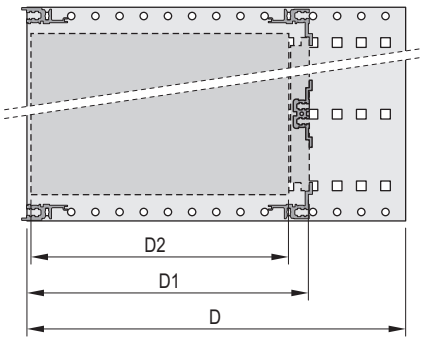

06108050

D=overall depth, D1=insertion depth,
D2=board depth = D1 - 15 mm

04400003

Rear horizontal rail for connector mounting

- Subrack can be used with slide rails
- Subrack with side panel type F ("flexible"), 19" bracket with notch for slide rail assembly
- Horizontal rails, rear, for connector mounting (IEC 60603-2 / DIN 41612)
- Installed load up to 11 kg

DELIVERY INCLUDES (Kit, flat pack)

Item	Qty 3 U	Qty 6 U	Description
1	2	2	19" support bracket, Al extrusion, for EMC sealing (St, stainless)
2	2	2	Side panel type F, Al, 2 mm
3a	2	2	Front horizontal rail (L-KD)
3b	2	2	Rear horizontal rail (L-MZ) for connector mounting
3c	-	1	Center horizontal rail (MZ)
4	2	2	Threaded insert to front (pre-fitted)
5	1	1	Fixing materials kit, user manual

ORDER INFORMATION

Height U	Width HP	Depth D mm	Depth D1 mm	Part no.
3	84	235	175/235	24553-192
3	84	295	175/235/295	24553-193
3	84	355	175/235/295/355	24553-194
6	84	235	175/235	24553-492
6	84	295	175/235/295	24553-493
6	84	355	175/235/295/355	24553-494

Accessories

19" fixing material kit (screw, washer, nut) (8 × screws, 8 × plastic washers, 8 × cage nuts)	**21100-435**

Guide rails (standard), ESD clips

Depth D2 mm	Qty/PU piece	Part no.
160	10	**24568-361**
220	10	**24568-362**
280	10	**24568-379**
ESD clip for guide rails Spring steel, tin-plated, silver, PU 50 pieces		**24560-255**

Cover plates for insertion into horizontal rail type L

Depth D2 mm	Width HP	Qty/PU piece	Part no.
160	84	2	**24561-051**
220	84	2	**24561-052**

NOTE

- Alternative product for legacy Europac Lab and Europac Rational subrack series

Subracks – EuropacPRO

KIT, "FLEXIBLE", UNSHIELDED, FLEXIBLE FOR BACKPLANE, ASSEMBLY ON SLIDE RAIL

134592766

6 U

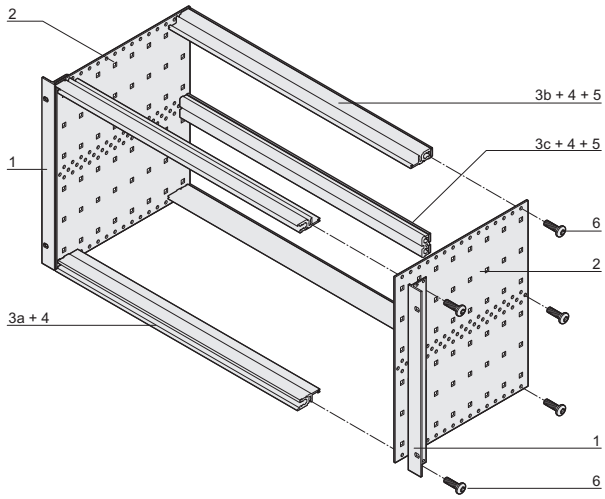

06102081

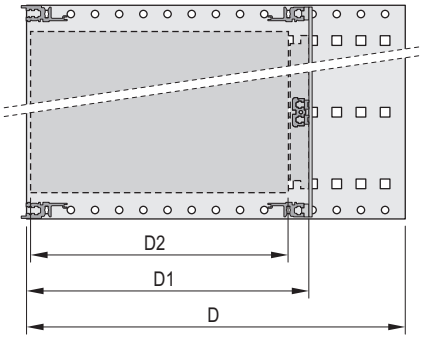

06108051

D=overall depth, D1=insertion depth,
D2=board depth = D1 - 15 mm

04400001

Rear horizontal rail for backplane mounting with insulation strip

- Subrack can be used with slide rails
- Subrack with side panel type F ("flexible"), 19" bracket is depth-adjustable
- Rear horizontal rails for backplane mounting with insulation strip
- Installed load up to 11 kg

DELIVERY INCLUDES (Kit, flat pack)

Item	Qty 3 U	Qty 6 U	Description
1	2	2	19" support bracket, Al extrusion, for EMC sealing (St, stainless)
2	2	2	Side panel type F, Al, 2 mm
3a	2	2	Front horizontal rail (L-KD)
3b	2	2	Rear horizontal rail (L-ST) for backplane mounting
3c	-	1	Rear center horizontal rail (ST)
4	4	6	Threaded inserts, front and rear (pre-fitted)
5	2	4	Insulation strip (pre-fitted)
6	1	1	Fixing materials kit, user manual

ORDER INFORMATION

Height U	Width HP	Depth D mm	Depth D1 mm	Part no.
3	84	235	175/235	24553-132
3	84	295	175/235/295	24553-133
3	84	355	175/235/295/355	24553-134
6	84	235	175/235	24553-432
6	84	295	175/235/295	24553-433
6	84	355	175/235/295/355	24553-434

Accessories

19" fixing material kit (screw, washer, nut) (8 × screws, 8 × plastic washers, 8 × cage nuts)	**21100-435**

Guide rails (standard), ESD clips

Depth D2 mm	Qty/PU piece	Part no.
160	10	**24568-361**
220	10	**24568-362**
280	10	**24568-379**
340	10	**24568-380**
ESD clip for guide rails Spring steel, tin-plated, silver, PU 50 pieces		**24560-255**

Cover plates for insertion into horizontal rail type L

Depth D2 mm	Width HP	Qty/PU piece	Part no.
160	84	2	**24561-051**
220	84	2	**24561-052**

NOTE

- Alternative product for legacy Europac Lab and Europac Rational subrack series

Subracks – EuropacPRO

KIT, "FLEXIBLE", UNSHIELDED, FOR BACKPLANE MOUNTING

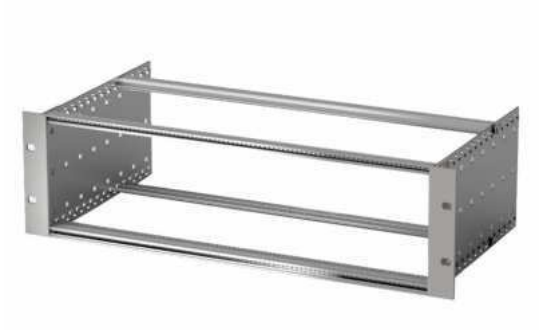

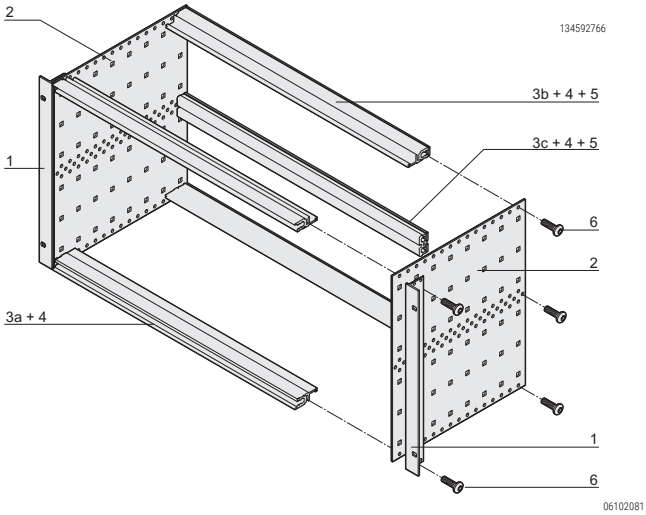

6 U

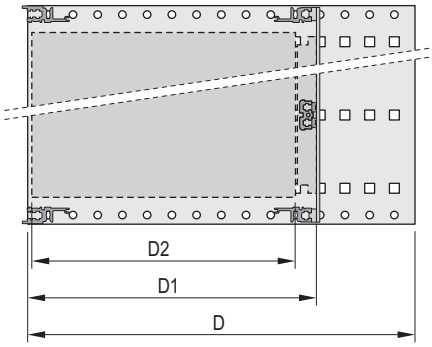

D = overall depth, D1 = insertion depth,
D2 = board depth = D1 - 15 mm

Rear horizontal rail for backplane mounting with insulation strip

- Subrack with side panel type F ("flexible"), 19" bracket is depth-adjustable
- Rear horizontal rail for backplane mounting with insulation strip
- Installed load up to 11 kg

DELIVERY COMPRISES (kit)

Item	Qty 3 U	Qty 6 U	Description
1	2	2	19" support bracket, Al extrusion, for EMC stainless steel gasket
2	2	2	Side panel type F, Al, 2 mm
3a	2	2	Front horizontal rail (L-KD)
3b	2	2	Rear horizontal rail (L-ST) for backplane mounting
3c	-	1	Rear horizontal rail centre (ST)
4	4	6	Threaded insert, front and rear (pre-fitted)
5	2	4	Insulation strip (pre-fitted)
6	1	1	Fixing material kit, user manual

ORDER INFORMATION

Height U	Width HP	Depth D mm	Depth D1 mm	Part no.
3	84	175	175	**24563-131**
3	84	235	175/235	**24563-132**
3	84	295	175/235/295	**24563-133**
3	84	355	175/235/295/355	**24563-134**
3	84	415	175/235/295/355	**24563-135**
3	84	475	175/235/295/355	**24563-136**
6	84	175	175	**24563-431**
6	84	235	175/235	**24563-432**
6	84	295	175/235/295	**24563-433**
6	84	355	175/235/295/355	**24563-434**
6	84	415	175/235/295/355	**24563-435**
6	84	475	175/235/295/355	**24563-436**

Accessories

19" assembly kit (screw, washer, nut) (8 × screws, 8 × plastic washers, 8 × cage nuts)	**21100-435**

Guide rails (standard), ESD clips

Depth D2 mm	Qty/PU piece	Part no.
160	10	**24568-361**
220	10	**24568-362**
280	10	**24568-379**
340	10	**24568-380**
ESD clip for guide rails PU 50 pieces		**24560-255**

Cover plates for insertion in horizontal rails (type L)

Depth D2 mm	Width HP	Qty/PU piece	Part no.
160	84	2	**24561-051**
220	84	2	**24561-052**

Subracks – EuropacPRO

KIT, "FLEXIBLE", SHIELDED, FOR BACKPLANE MOUNTING

I28288219

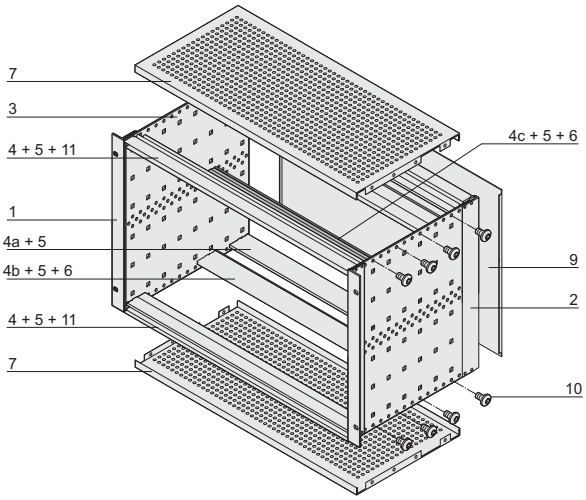

6 U

06102075

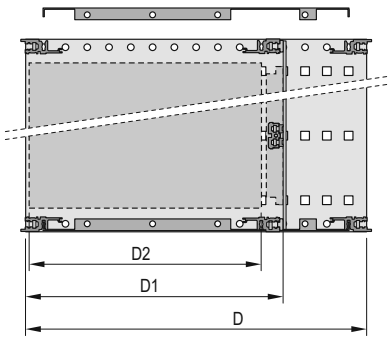

06113056

D = overall depth, D1 = insertion depth,
D2 = board depth = D1 - 15 mm

04400001

Rear horizontal rail for backplane mounting with insulation strip

- Subrack with side panel type F ("flexible"), 19" bracket is depth-adjustable
- Rear horizontal rail for backplane mounting with insulation strip
- Shielding typically 40 dB at 1 GHz, 30 dB at 2 GHz, assuming that the front is closed with shielded front panels
- Installed load up to 11 kg

DELIVERY COMPRISES ((kit))

Item	Qty 3 U	6 U	Description
1	2	2	19" support bracket for **EMC textile gasket**
2	2	2	Rear corner profile for **EMC textile gasket**
3	2	2	Side panel type F
4	2	2	Front horizontal rail (L-KD)
4 a	2	2	Rear horizontal rail (L-KD)
4 b	2	2	Rear horizontal rail (L-ST) for backplane mounting with insulation strip
4 c	-	1	Centre horizontal rail (ST)
5	6	8	Threaded insert (pre-fitted)
6	2	4	Insulation strip, fixed
7	2	2	EMC cover plate
8	1	1	EMC gasketing material (pre-fitted)
9	1	1	Rear panel
10	1	1	Fixing material kit
11	2	2	Perforated strip (pre-fitted)
12	1	1	User manual

ORDER INFORMATION

Height U	Width HP	Depth D mm	Depth D1 mm	Part no.
3	84	235	175	**24563-142**
3	84	295	175/235	**24563-143**
3	84	355	175/235/295	**24563-144**
3	84	415	175/235/295	**24563-145**
3	84	475	175/235/295	**24563-146**
6	84	235	175	**24563-442**
6	84	295	175/235	**24563-443**
6	84	355	175/235/295	**24563-444**
6	84	415	175/235/295	**24563-445**
6	84	475	175/235/295	**24563-446**

Accessories

19" assembly kit (screw, washer, nut) (8 × screws, 8 × plastic washers, 8 × cage nuts)	**21100-435**
1 kit, EMC gasket stainless steel, for U-shaped front panel, 3U, 10x	**21102-105**
1 kit, EMC gasket stainless steel, for U-shaped front panel, 6U, 10x	**21102-107**

Guide rails (standard), ESD clips

Depth D2 mm	Qty/PU piece	Part no.
160	10	**24568-361**
220	10	**24568-362**
280	10	**24568-379**
ESD clip for guide rails PU 50 pieces		**24560-255**

Part number in bold face type: ready for shipping within 2 working days
Part number in normal type: ready for shipping within 10 working days

Subracks – EuropacPRO

KIT, 'HEAVY', UNSHIELDED, FOR BACKPLANE MOUNTING

135906895

Without front handle

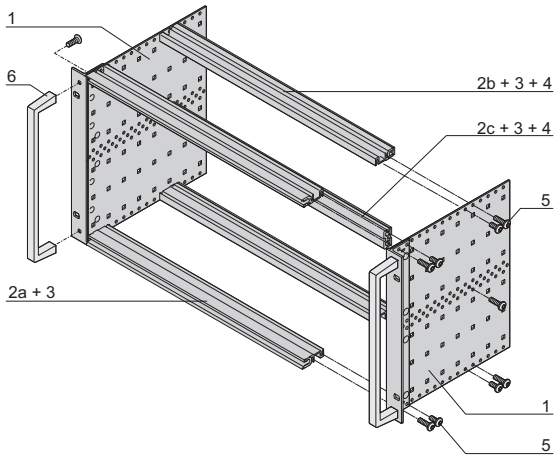

06111057

6 U

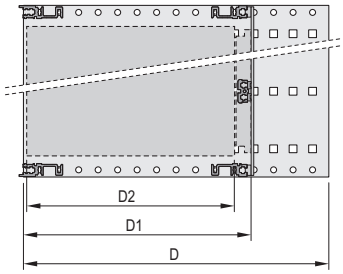

06108052

D = overall depth, D1 = insertion depth, D2 = board depth

04400001

Rear horizontal rail for backplane mounting with insulation strip

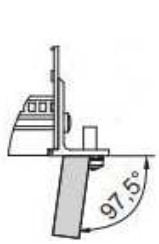

Front handle position

- Subrack with side panel type H ("heavy"), 19" bracket is firmly fixed to side panel (tox-cold welded)
- Rear horizontal rail for backplane mounting with insulation strip
- Shock and vibration resistance up to 5 g
- Installed load up to 15 kg
- Versions with/without front handles

DELIVERY COMPRISES (Kit)

Item	Qty 3 U	Qty 6 U	Description
1	2	2	Side panel type H, Al, 2 mm, passivated, with 19" support bracket (tox-cold welded) for textile EMC gasket
2a	2	2	Front horizontal rail (H-KD)
2b	2	2	Rear horizontal rail (H-ST)
2c	-	1	Rear horizontal rail centre (H-ST)
3	4	6	Threaded insert, front and rear (pre-fitted)
4	2	4	Insulation strip (pre-fitted)
5	1	1	Fixing material kit, user manual
6	2	2	Front handle, angled version (on version with front handle only)

ORDER INFORMATION

Height U	Width HP	Depth D mm	Depth D1 mm	Part no. with front handle	Part no. without front handle
3	84	175	175	**24567-161**	**24563-161**
3	84	235	175/235	**24567-162**	**24563-162**
3	84	295	175/235/295	**24567-163**	**24563-163**
3	84	355	175/235/295/355	**24567-164**	**24563-164**
6	84	175	175	**24567-461**	**24563-461**
6	84	235	175/235	**24567-462**	**24563-462**
6	84	295	175/235/295	**24567-463**	**24563-463**
6	84	355	175/235/295/355	**24567-464**	**24563-464**

Accessories

19" assembly kit (screw, washer, nut) (8 × screws, 8 × plastic washers, 8 × cage nuts)	**21100-435**

Guide rails (standard), ESD clips

Depth D2 mm	Qty/PU piece	Part no.
160	10	**24568-361**
220	10	**24568-362**
280	10	**24568-379**
340	10	**24568-380**
ESD clip for guide rails PU 50 pieces		**24560-255**
Torx panhead screw , for extra bolting of the guide rails, 2.5 × 9.3, zinc-plated, PU 100 pieces; torque max. 0.2 Nm		**24560-141**

Cover plates for bolting to side panel

Depth D2 mm	Width HP	Qty/PU piece	Part no.
160	84	2	**24560-078**
220	84	2	**24560-079**
280	84	2	**24560-080**
340	84	2	**24560-081**

Remark:

- ServicePLUS from page 6.20
- The slightly angled front handles facilitate access to the fixing screws. (Screwing into a 19" Cabinet)
  The handle are screwed from the rear side of the 19" bracket

Subracks – EuropacPRO

KIT, "HEAVY", SHIELDED, FOR BACKPLANE MOUNTING

Without front handle With front handle

135906896

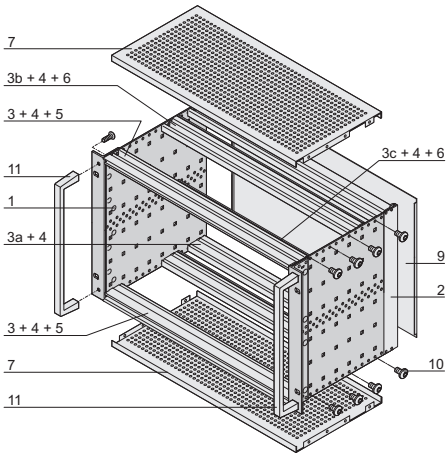

6 U

06111058

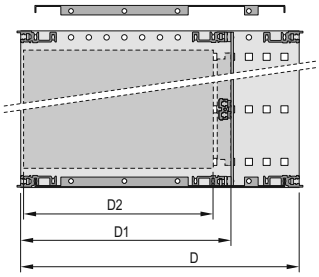

06113055

D = overall depth, D1 = insertion depth, D2 = board depth = D1 - 15 mm

04400001

Rear horizontal rail for backplane mounting with insulation strip

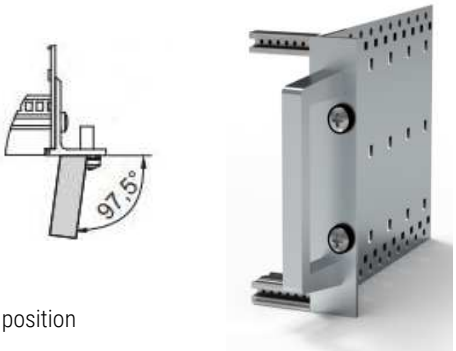

Front handle position

- Subrack with side panel type H ("heavy"), 19" bracket is firmly fixed to side panel (tox-cold welded)
- Rear horizontal rail for backplane mounting with insulation strip
- Shielding typically 40 dB at 1 GHz, 30 dB at 2 GHz, assuming that the front is closed with sealed front panels
- Shock and vibration resistance up to 5 g
- Installed load up to 15 kg
- Versions with/without front handles

DELIVERY COMPRISES (Kit)

Item	Qty 3 U	6 U	Description
1	2	2	Side panel type H, Al, 2 mm, passivated, with 19" support bracket (tox-cold welded) for textile EMC gasket
2	2	2	Rear corner profile for textile EMC gasket
3	2	2	Front horizontal rail (H-KD)
3 a	2	2	Rear horizontal rail (H-KD)
3 b	2	2	Rear horizontal rail (H-ST)
3 c	-	1	Rear horizontal rail centre (ST)
4	6	8	Threaded insert (pre-fitted)
5	2	2	Perforated strip (pre-fitted)
6	2	4	Insulation strip (pre-fitted)
7	2	2	EMC cover plate
8	1	1	EMC gasketing material (pre-fitted)
9	1	1	EMC rear panel
10	1	1	Fixing material kit, user manual
11	2	2	Front handle, angled version (on version with front handle only)

ORDER INFORMATION

Height U	Width HP	Depth D mm	Depth D1 mm	Part no. with front handle	Part no. without front handle
3	84	235	175	**24567-172**	**24563-172**
3	84	295	175/235	**24567-173**	**24563-173**
3	84	355	175/235/295	**24567-174**	**24563-174**
6	84	235	175	**24567-472**	**24563-472**
6	84	295	175/235	**24567-473**	**24563-473**
6	84	355	175/235/295	**24567-474**	**24563-474**

Accessories

19" assembly kit (screw, washer, nut) 8 × screws, 8 × plastic washers, 8 × cage nuts)	**21100-435**
1 kit, EMC gasket stainless steel, for U-shaped front panel, 3U, 10x	**21102-105**
1 kit, EMC gasket stainless steel, for U-shaped front panel, 6U, 10x	**21102-107**

Guide rails (standard), ESD clips

Depth D2 mm	Qty/PU piece	Part no.
160	10	**24568-361**
220	10	**24568-362**
280	10	**24568-379**
ESD clip for guide rails PU 50 pieces		**24560-255**
Torx panhead screw , for extra bolting of the guide rails, 2.5 × 9.3, zinc-plated, PU 100 pieces; torque max. 0.2 Nm		**24560-141**

Remark:

- ServicePLUS from page 6.20
- The slightly angled front handles facilitate access to the fixing screws. (Screwing into a 19" Cabinet)
  The handle are screwed from the rear side of the 19" bracket

Part number in bold face type: ready for despatch within 2 working days
Part number in normal type: ready for despatch within 10 working days

Subracks – EuropacPRO

ADVANCED EMC, KIT "HEAVY" , FOR BACKPLANE MOUNTING

NEW

Without front handle With front handle

- Advanced EMC subrack with significantly improved RF-shielding (on average 45%), tested i.a.w. with EN 61000-5-7* Pending
- Top and bottom covers with EMC and airflow optimized perforation, fulfills fire safety requirements i.a.w. EN 62368-1.
- Additional side panel covers, for an increased lateral RF-shielding.
- Horizontal rails and side panels of type H ("Heavy")
- Rear horizontal rail for backplane mounting without insulation strip.
- Shock and vibration resistance up to 5 g i.a.w. EN 61373
- Installation load up to 15 kg
- IP20, in accordance with IEC 60529

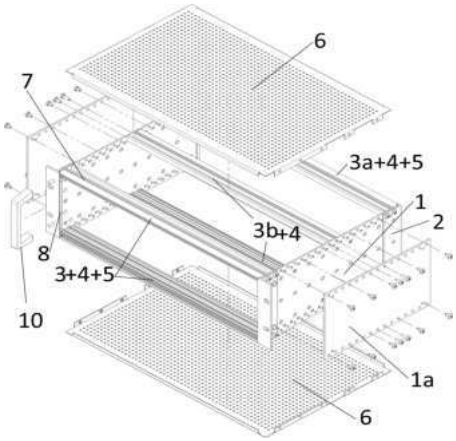

3 U

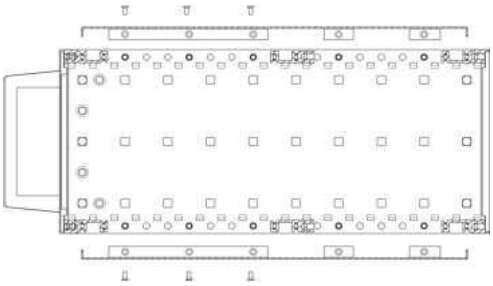

Rear horizontal rail for backplane mounting directly

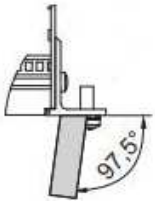

Front handle position

DELIVERY COMPRISES (Kit)

Item	Qty 3 U	Description
1	2	Side panel type H, Al, 2 mm, passivated,with 19" support bracket (tox-cold welded) for textile EMC or stainless steel gaskets
1a	2	Advanced EMC side panel cover, Al, 3mm, passivated
2	2	Rear corner profile for textile EMC gasket
3	2	Front horizontal rail (H-KD)
3 a	2	Rear horizontal rail (H-KD)
3 b	2	Rear horizontal rail (H-VT)
3 c	-	Rear horizontal rail centre (VT)
4	6	Threaded insert (pre-fitted)
5	2	Perforated strip (pre-fitted)
6	2	Advanced EMC cover plate, perforation diameter Ø 2.3mm,
7	1	EMC gasketing material (pre-fitted)
8	1	Stainless and textile gasket for front / rear shielding
9	1	Fixing material kit, user manual
10	2	Front handle, angled version (on version with front handle only)

ORDER INFORMATION

U Height	HP Width	Depth D mm	Depth D1 mm	Part no. with front handle	Part no. without front handle
3	84	235	175	**24563**-900	**24563**-950
3	84	295	175 / 235	**24563**-901	**24563**-951
3	84	355	175 / 235 / 295	**24563**-903	24563-953

Accessories

19" assembly kit (screw, washer, nut) 8 × screws, 8 × plastic washers, 8 × cage nuts)	**21100-435**
1 kit, EMC gasket stainless steel, for U-shaped front panel, 3U, 10x	**21102-105**
1 kit, EMC gasket stainless steel, for U-shaped front panel, 6U, 10x	**21102-107**

Guide rails (standard), ESD clips **Depth D2** mm	**Qty/PU** piece	**Part no.**
160	10	**24568-361**
220	10	**24568-362**
280	10	**24568-379**
ESD clip for guide rails PU 50 pieces		**24560-255**
Torx panhead screw , for extra bolting of the guide rails, 2.5 × 9.3, zinc-plated, PU 100 pieces; torque max. 0.2 Nm		**24560-141**

Remark:

- Please order the rear panel and front panels separatly
- The slightly angled front handles facilitate access to the fixing screws. (Screwing into a 19" Cabinet)
  The handle are screwed from the rear side of the 19" bracket

Subracks – EuropacPRO

ADVANCED EMC, KIT "HEAVY" , FOR BACKPLANE MOUNTING

NEW

- Advanced EMC subrack with significantly improved RF-shielding (on average 45%), tested i.a.w. with EN 61000-5-7* Pending
- Top and bottom covers with EMC and airflow optimized perforation, fulfills fire safety requirements i.a.w. EN 62368-1.
- Additional side panel covers, for an increased lateral RF-shielding.
- Horizontal rails and side panels of type H ("Heavy")
- Rear horizontal rail for backplane mounting without insulation strip.
- Shock and vibration resistance up to 5 g i.a.w. EN 61373
- Installation load up to 15 kg
- IP20, in accordance with IEC 60529

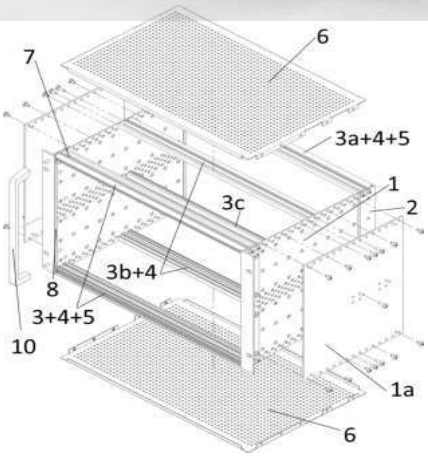

6 U

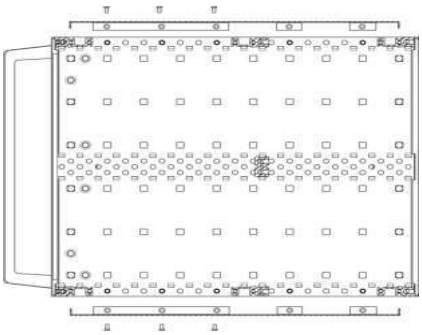

Rear horizontal rail for backplane mounting directly

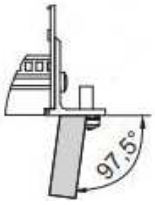

Front handle position

DELIVERY COMPRISES (Kit)

Item	Qty 6 U	Description
1	2	Side panel type H, Al, 2 mm, passivated,with 19" support bracket (tox-cold welded) for textile EMC or stainless steel gaskets
1a	2	Advanced EMC side panel cover, Al, 3mm, passivated
2	2	Rear corner profile for textile EMC gasket
3	2	Front horizontal rail (H-KD)
3 a	2	Rear horizontal rail (H-KD)
3 b	2	Rear horizontal rail (H-VT)
3 c	1	Rear horizontal rail centre (VT)
4	6	Threaded insert (pre-fitted)
5	2	Perforated strip (pre-fitted)
6	2	Advanced EMC cover plate, perforation diameter Ø 2.3mm,
7	1	EMC gasketing material (pre-fitted)
8	1	Stainless and textile gasket for front / rear shielding
9	1	Fixing material kit, user manual
10	2	Front handle, angled version (on version with front handle only)

ORDER INFORMATION

U Height	HP Width	Depth D mm	Depth D1 mm	Part no. with front handle	Part no. without front handle
6	84	235	175	**24563-910**	**24563-960**
6	84	295	175 / 235	**24563-911**	**24563-961**
6	84	355	175 / 235 / 295	**24563-913**	24563-963

Accessories

19" assembly kit (screw, washer, nut) 8 × screws, 8 × plastic washers, 8 × cage nuts)	**21100-435**
1 kit, EMC gasket stainless steel, for U-shaped front panel, 3U, 10x	**21102-105**
1 kit, EMC gasket stainless steel, for U-shaped front panel, 6U, 10x	**21102-107**

Guide rails (standard), ESD clips Depth D2 mm	Qty/PU piece	Part no.
160	10	**24568-361**
220	10	**24568-362**
280	10	**24568-379**
ESD clip for guide rails PU 50 pieces		**24560-255**
Torx panhead screw , for extra bolting of the guide rails, 2.5 × 9.3, zinc-plated, PU 100 pieces; torque max. 0.2 Nm		**24560-141**

Remark:

- Please order the rear panel and front panels separatly
- The slightly angled front handles facilitate access to the fixing screws. (Screwing into a 19" Cabinet)
  The handle are screwed from the rear side of the 19" bracket

Part number in bold face type: ready for despatch within 2 working days
Part number in normal type: ready for despatch within 10 working days

Subracks – EuropacPRO

ADVANCED EMC PLUS, KIT "HEAVY", FOR DIRECT BACKPLANE MOUNTING

NEW

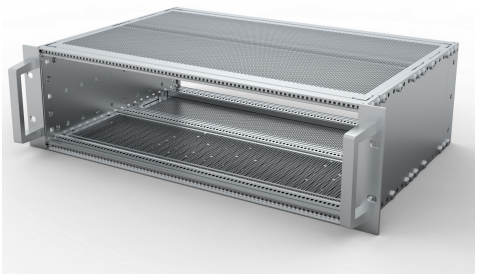

Image shows version with front handle

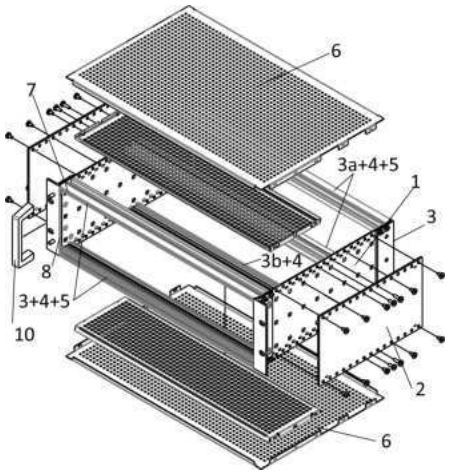

3 U

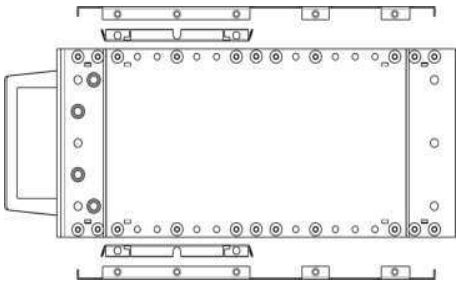

Rear horizontal rail for backplane mounting directly

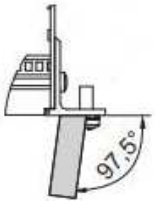

Front handle position

- Advanced EMC subrack with significantly improved RF-shielding (on average 60%), tested i.a.w. with EN 61000-5-7
- Dual Mesh top and bottom covers with EMC and airflow optimized perforations, fulfills fire safety requirements i.a.w. EN 62368-1.
- Additional side panel covers, for an increased lateral RF-shielding.
- Horizontal rails and side panels of type H ("Heavy")
- Rear horizontal rail for backplane mounting without insulation strip.
- Shock and vibration resistance up to 5 g i.a.w. EN 61373
- Installation load up to 15 kg
- IP20, in accordance with IEC 60529

DELIVERY COMPRISES (Kit)

Item	Qty 3 U	Description
1	2	Side panel type H, Al, 2 mm, passivated,with 19" support bracket (tox-cold welded) for textile EMC or stainless steel gaskets
1a	2	Advanced EMC side panel cover, Al, 3mm, passivated
2	2	Rear corner profile for textile EMC gasket
3	2	Front horizontal rail (H-KD)
3 a	2	Rear horizontal rail (H-KD)
3 b	2	Rear horizontal rail (H-VT)
3 c	-	Rear horizontal rail centre (VT)
4	6	Threaded insert (pre-fitted)
5	2	Perforated strip (pre-fitted)
6	2	Advanced EMC Plus cover plates, perforation diameter Ø 2.3mm, with additional mesh cover
7	1	EMC gasketing material (pre-fitted)
8	1	Stainless and textile gasket for front / rear shielding
9	1	Fixing material kit, user manual
10	2	Front handle, angled version (on version with front handle only)

ORDER INFORMATION

U Height	HP Width	Depth D mm	Depth D1 mm	Part no. with front handle	Part no. without front handle
3	84	235	175	**24563-920**	**24563-970**
3	84	295	175	**24563-921**	**24563- 971**
3	84	355	175	**24563-923**	**24563- 973**
3	84	295	235	**24563-922**	**24563- 972**
3	84	355	235	**24563-924**	**24563- 974**
3	84	355	295	**24563-925**	**24563- 975**

Accessories

19" assembly kit (screw, washer, nut) 8 × screws, 8 × plastic washers, 8 × cage nuts)	**21100-435**
1 kit, EMC gasket stainless steel, for U-shaped front panel, 3U, 10x	**21102-105**
1 kit, EMC gasket stainless steel, for U-shaped front panel, 6U, 10x	**21102-107**

Guide rails (standard), ESD clips Depth D2 mm	Qty/PU piece	Part no.
160	10	**24568-361**
220	10	**24568-362**
280	10	**24568-379**
ESD clip for guide rails PU 50 pieces		**24560-255**
Torx panhead screw , for extra bolting of the guide rails, 2.5 × 9.3, zinc-plated, PU 100 pieces; torque max. 0.2 Nm		**24560-141**

Remark:

- Please order the rear panel and front panels separatly
- The slightly angled front handles facilitate access to the fixing screws. (Screwing into a 19" Cabinet)
  The handle are screwed from the rear side of the 19" bracket

Subracks – EuropacPRO

ADVANCED EMC PLUS KIT "HEAVY", FOR DIRECT BACKPLANE MOUNTING

NEW

Image shows version with front handle

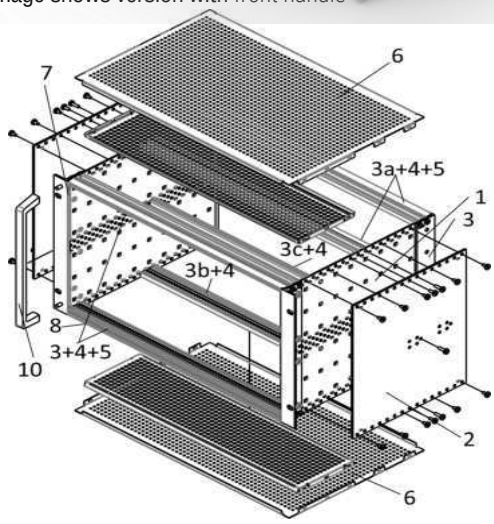

6 U

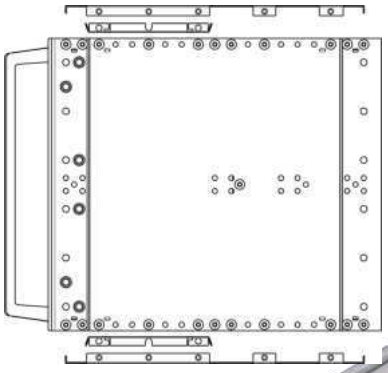

Rear horizontal rail for backplane mounting directly

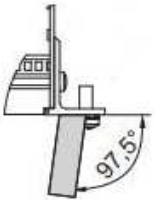

Front handle position

- Advanced EMC subrack with significantly improved RF-shielding (on average 60%), tested i.a.w. with EN 61000-5-7
- Dual Mesh top and bottom covers with EMC and airflow optimized perforation, fulfills fire safety requirements i.a.w. EN 62368-1.
- Additional side panel covers, for an increased lateral RF-shielding.
- Horizontal rails and side panels of type H ("Heavy")
- Rear horizontal rail for backplane mounting without insulation strip.
- Shock and vibration resistance up to 5 g i.a.w. EN 61373
- Installation load up to 15 kg
- IP20, in accordance with IEC 60529

DELIVERY COMPRISES (Kit)

Item	Qty 3 U	Description
1	2	Side panel type H, Al, 2 mm, passivated,with 19" support bracket (tox-cold welded) for textile EMC or stainless steel gaskets
1a	2	Advanced EMC side panel cover, Al, 3mm, passivated
2	2	Rear corner profile for textile EMC gasket
3	2	Front horizontal rail (H-KD)
3 a	2	Rear horizontal rail (H-KD)
3 b	2	Rear horizontal rail (H-VT)
3 c	-	Rear horizontal rail centre (VT)
4	6	Threaded insert (pre-fitted)
5	2	Perforated strip (pre-fitted)
6	2	Advanced EMC Plus cover plates, perforation diameter Ø 2.3mm, with additional mesh cover
7	1	EMC gasketing material (pre-fitted)
8	1	Stainless and textile gasket for front / rear shielding
9	1	Fixing material kit, user manual
10	2	Front handle, angled version (on version with front handle only)

ORDER INFORMATION

U Height	HP Width	Depth D mm	Depth D1 mm	Part no. with front handle	Part no. without front handle
6	84	235	175	**24563**-930	**24563**-980
6	84	295	175	**24563**-931	**24563**-981
6	84	355	175	**24563**-933	**24563**-983
6	84	295	235	**24563**-932	**24563**-982
6	84	355	235	**24563**-934	**24563**-984
6	84	355	295	**24563**-935	**24563**-985

Accessories

19" assembly kit (screw, washer, nut) 8 × screws, 8 × plastic washers, 8 × cage nuts)	**21100-435**
1 kit, EMC gasket stainless steel, for U-shaped front panel, 3U, 10x	**21102-105**
1 kit, EMC gasket stainless steel, for U-shaped front panel, 6U, 10x	**21102-107**

Guide rails (standard), ESD clips Depth D2 mm	Qty/PU piece	Part no.
160	10	**24568-361**
220	10	**24568-362**
280	10	**24568-379**
ESD clip for guide rails PU 50 pieces		**24560-255**
Torx panhead screw , for extra bolting of the guide rails, 2.5 × 9.3, zinc-plated, PU 100 pieces; torque max. 0.2 Nm		**24560-141**

Remark:

- Please order the rear panel and front panels separatly
- The slightly angled front handles facilitate access to the fixing screws. (Screwing into a 19" Cabinet)
  The handle are screwed from the rear side of the 19" bracket

Part number in bold face type: ready for despatch within 2 working days
Part number in normal type: ready for despatch within 10 working days

Subracks – EuropacPRO

KIT, "FLEXIBLE", FOR COMPACTPCI, FOR BACKPLANE MOUNTING, WITHOUT REAR I/O, SHIELDED

6 U

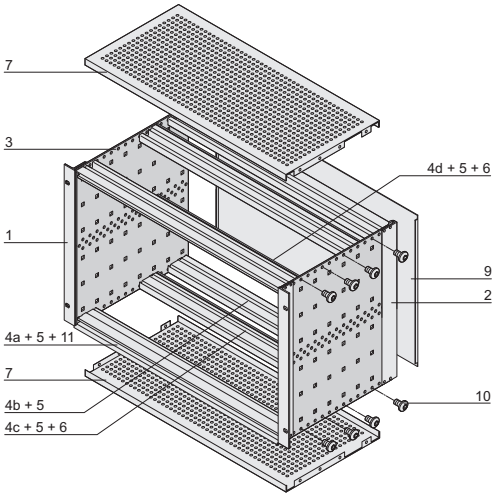

134908829

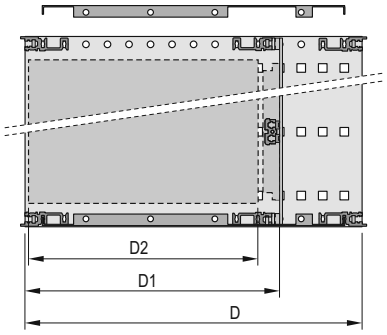

06102078

06113055

D = overall depth, D1 = insertion depth,
D2 = board depth = D1 - 15 mm

04400001

Rear horizontal rail for backplane mounting with insulation strip

- Subrack with side panel type F ("flexible") for CompactPCI plug-in units with high insertion and withdrawal forces
- Rear horizontal rail for backplane mounting with insulation strip
- Shielding typically 40 dB at 1 GHz, 30 dB at 2 GHz, assuming that the front is covered with shielded front panels
- Installed load up to 11 kg

DELIVERY COMPRISES (kit)

Item	Qty 3 U	Qty 6 U	Description
1	2	2	19" support bracket for **EMC textile gasket**
2	2	2	Rear corner profile for **EMC textile gasket**
3	2	2	Side panel type F
4	1	-	Front horizontal rail (H-KD)
4 a	1	2	Front horizontal rail IEEE (H-LD)
4 b	2	2	Rear horizontal rail (L-KD)
4 c	2	2	Rear horizontal rail (H-ST), for backplane mounting with insulation strip
4 d	-	1	Centre horizontal rail (ST)
5	6	8	Threaded insert (pre-fitted)
6	2	4	Insulation strip (pre-fitted)
7	2	2	EMC cover plate
8	1	1	EMC gasketing material (pre-fitted)
9	1	1	Rear panel
10	1	1	Fixing material kit
11	2	2	Perforated strip (pre-fitted in item 4+4a)
12	1	1	User manual

ORDER INFORMATION

Height U	Width HP	Depth D mm	Depth D1 mm	Part no.
3	84	235	175	**24563-152**
6	84	235	175	**24563-452**
Accessories				
Guide rail with coding, red 160 mm deep, PC, UL 94 V-0, groove width 2 mm, PU 10 pieces				**24568-356**
Guide rail with coding, grey 160 mm deep, PC, UL 94 V-0, groove width 2 mm, PU 10 pieces				**24568-358**
Guide rail with coding, green, offset 160 mm deep, PC, UL 94 V-0, groove width 2 mm, PU 10 pieces				**24568-359**
ESD clip for guide rails PU 50 pieces				**24560-255**
ESD clip for alignment pin of CPCI/VME64x handle PU 50 pieces				**24560-256**
Torx panhead screw 2.5 × 9.3, zinc-plated, PU 100 pieces; torque max. 0.2 Nm				**24560-141**
Coding peg PC, UL 94 V-0, RAL 7035, PU 100 pieces				**20817-501**
19" assembly kit (screw, washer, nut) (8 × screws, 8 × plastic washers, 8 × cage nuts)				**21100-435**
1 kit, EMC gasket stainless steel, for U-shaped front panel, 3U, 10x				**21102-105**
1 kit, EMC gasket stainless steel, for U-shaped front panel, 6U, 10x				**21102-107**

Subracks – EuropacPRO

SUBRACK KIT, "FLEXIBLE", FOR COMPACTPCI, FOR BACKPLANE MOUNTING, FOR REAR I/O, SHIELDED

- Subrack with side panel type F ("flexible") for CompactPCI plug-in units with high insertion and withdrawal forces
- For rear I/O boards (depth 80 mm)
- Rear horizontal rail for backplane mounting with insulation strip
- Shielding typically 40 dB at 1 GHz, 30 dB at 2 GHz, assuming that the front is covered with shielded front panels
- Installed load up to 11 kg

6 U

134908840

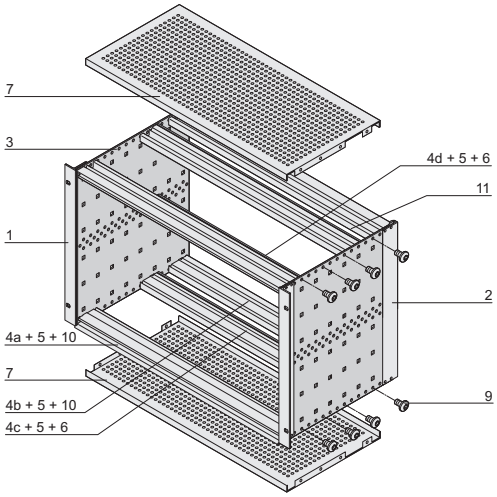

06105076

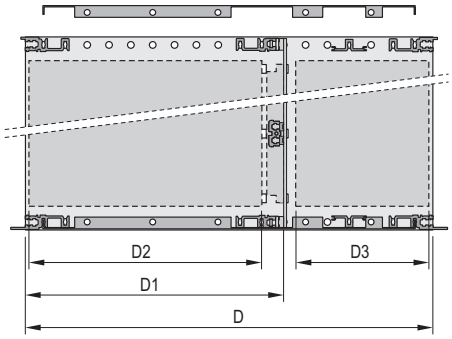

06108075

D = overall depth, D1 = insertion depth,
D2 = board depth = D1 - 15 mm, D3 = rear I/O board depth

04400001

Rear horizontal rail for backplane mounting with insulation strip

DELIVERY COMPRISES (kit)

Item	Qty 3 U	Qty 6 U	Description
1	2	2	19" support bracket for **EMC textile gasket**
2	2	2	Rear corner profile for **EMC textile gasket**
3	2	2	Side panel type F
4	1	-	Front horizontal rail (H-KD)
4 a	1	2	Front horizontal rail IEEE (H-LD)
4 b	2	2	Rear horizontal rail (H-KD)
4 c	2	2	Rear horizontal rail (H-ST), with insulation strip for backplane mounting
4 d	-	1	Centre horizontal rail (ST)
5	6	8	Threaded insert (pre-fitted)
6	2	4	Insulation strip, fixed
7	2	2	EMC cover plate
8	1	1	EMC gasketing material (pre-fitted)
9	1	1	Fixing material kit
10	2	2	Perforated strip (pre-fitted)
11	2	2	Horizontal rail type AB
12	1	1	User manual

ORDER INFORMATION

Height U	Width HP	Depth D mm	Depth D1 mm	Depth D3 mm	Part no.
3	84	275	175	80	**24563-157**
6	84	275	175	80	**24563-457**
Accessories					
Guide rail with coding, red 160 mm deep, PC, UL 94 V-0, groove width 2 mm, PU 10 pieces					**24568-356**
Guide rail with coding, grey 160 mm deep, PC, UL 94 V-0, groove width 2 mm, PU 10 pieces					**24568-358**
Guide rail with coding, green, offset 160 mm deep, PC, UL 94 V-0, groove width 2 mm, PU 10 pieces					**24568-359**
ESD clip for guide rails PU 50 pieces					**24560-255**
ESD clip for alignment pin of CPCI/VME64x handle PU 50 pieces					**24560-256**
Guide rail with coding, red 70 mm deep, PU 10 pieces					**24568-357**
Guide rail with coding, grey 70 mm deep, PU 10 pieces					**24568-360**
Torx panhead screw 2.5 × 9.3, zinc-plated, PU 100 pieces; torque max. 0.2 Nm					**24560-141**
Coding peg PC, UL 94 V-0, RAL 7035, PU 100 pieces					**20817-501**
19" fixing material kit (screw, washer, nut) (8 × screws, 8 × plastic washers, 8 × cage nuts)					**21100-435**
1 kit, EMC gasket stainless steel, for U-shaped front panel, 3U, 10x					**21102-105**
1 kit, EMC gasket stainless steel, for U-shaped front panel, 6U, 10x					**21102-107**

Part number in bold face type: ready for despatch within 2 working days
Part number in normal type: ready for despatch within 10 working days

Subracks – EuropacPRO

OVERVIEW OF INDIVIDUAL COMPONENTS FOR SHIELDED OR UNSHIELDED SUBRACKS

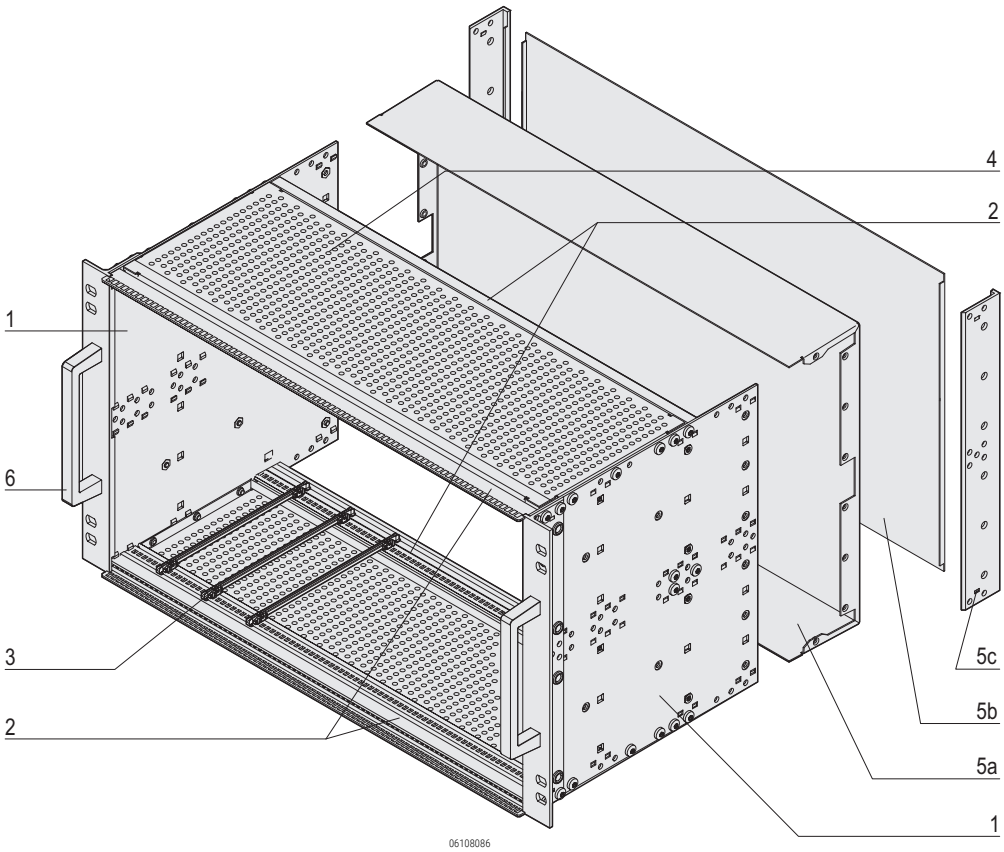

Item	Description	Description	page
Item 1	Side panel	Establishes the height and depth of the subrack; Al, 2 mm, with universal hole positions for assembly of accessories. Three versions: The "flexible" one with separate 19" brackets as well as two others with integrated 19" brackets for "light" and "heavy" applications.	6.24
Item 2	Horizontal rail	Establishes the width of the subrack; Al extrusion, with defined hole positions for guide rails, grooves for threaded inserts, M4 thread, functional rail shapes, basically differing with regard to their mechanical loading capacity: "light" (load up to 7.5 kg) and "heavy" (load > 7.5 kg).	6.30
Item 3	Guide rails	Act as interface between subracks and boards, for different board formats, are available in plastic or metal, optionally codable and can be fitted with ESD clips to allow electrostatic discharge, also optionally.	6.39
Item 4	Cover plates	Provide mechanical protection and/or EMC shielding and are perforated.	6.48
Item 5	Rear/front	Rear hood (5a) or front panel (5b) with corner profile (5c) act as support for EMC shielding gaskets used in conjunction with shielded front panels. Note: Rear hood and corner profile cannot be fitted simultaneously.	6.56
Item 6	Handles	Can be mounted on the 19" brackets.	6.29
–	EMC shielding (without illustration)	Extensive component range for specific shielding of subracks with respect to their application.	6.57
–	Interior assemblies (without illustration)	Universal assemblies, e.g. for horizontal and vertical assembly and for mounting plates.	6.76

Subracks – EuropacPRO

SUBRACK DIMENSIONS

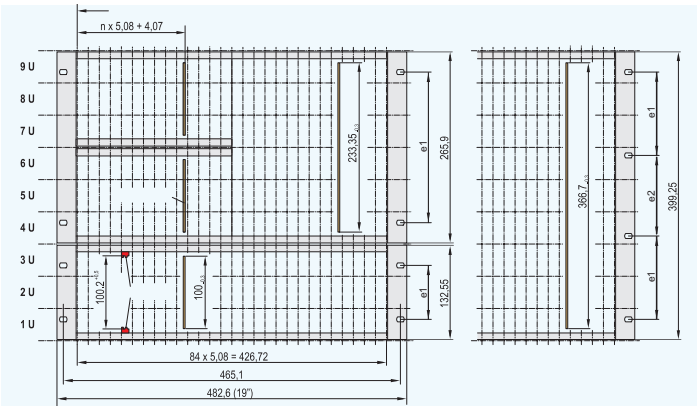

20304051

- Dimensions in accordance with international standards EC 60297-3-100, IEEE 1101.1/.10/.11; please see the SCHROFF Standards Summary for details
- Side panels
  - Aluminium, 2 mm
  - Round holes for mounting horizontal rails (depth grid 15 mm)
  - Impressions on the inner side of the side panel act as an anti-rotation guard and positioning aid for the horizontal rails
  - Square holes (6 x 6 mm) provide universal fixing for components such as backplane shielding; version without square holes available on request

06197003

Depth grid

The depth grid is 15 mm, the mounting holes in the side panel are decisive for the configurability of individual components; thus any combination of various individual parts is possible

06108008

Side panel 3 U, 6 U and 9 U

3 and 6 U side panels have the same hole positions (the 6 U is a doubling vertically of the 3 U); thus subdivisions can be made in the vertical dimension (6 U: 2 x 3 U; 9 U: 3 x 3 U)

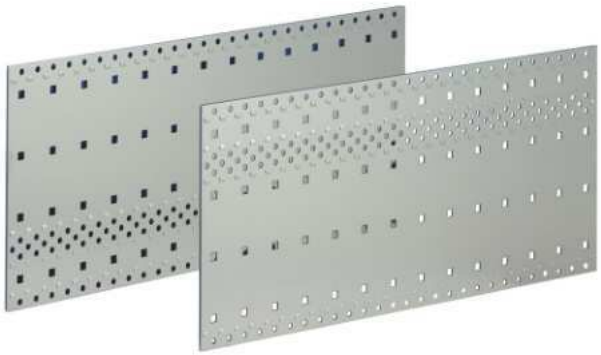

06108011

Side panel 4 U

4 U side panels have the same hole positions as 3 U and additionally 1 U (above or beneath the 3 U installation); this height allows the construction of a 3 U unit with 1 U clearance for cabling or airflow

SIDE PANELS

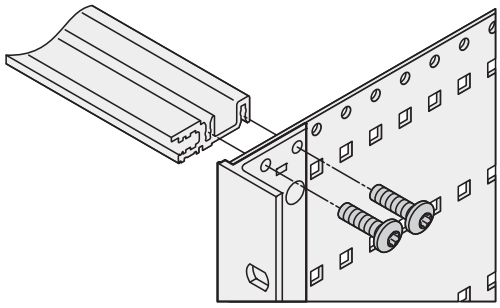

Side panel - horizontal rail assembly

06108062

- Aluminium
- Round holes for mounting horizontal rails (depth grid 15 mm)
- Impressions on the inner side of the side panel act as an anti-rotation guard and positioning aid for the horizontal rails
- Square holes (6 x 6 mm) provide universal fixing for components such as backplane shielding; version without square holes available on request
- Only one type of screw driver (T20) is needed for the assembly
  Torx panhead screw, M4 x 14;
  Torque side panel - horizontal rail 2.4 Nm;
  Torque side panel - cover plate 1.3 Nm
- 4 versions of the side panel:
  - Type F = flexible
  - Type H = heavy
  - Type L = light
  - Type R = rugged

06197003

Type F (flexible)

- Universal version: 19" bracket (please order separately) can be fitted variably to front, rear or depth-offset
- Heights: 3, 4, 6 and 9 U
  Depths: 175, 235, 275, 277.75, 295, 355, 415 and 475 mm;
  Other dimensions on request
- 2 EMC shielding concepts for the front/rear:
  stainless steel or textile EMC gasket
- Installed load up to 11 kg

06197004

Type H (heavy)

- 19" bracket is tox-cold welded to side panel; particularly designed for mechanically demanding environments (vibration resistance, applications requiring high levels of shock and vibration, e.g. IEC 61587-2)
- Heights: 3 and 6 U
  Depths: 175, 235, 295 and 355 mm
  Other dimensions on request
- 2 EMC shielding concepts for the front/rear:
  with stainless steel or textile EMC gasekt
- Installed load up to 15 kg

06197002

Type L (light)

- Side panel with moulded 19" bracket,
  for standard applications, unshielded
- Particularly cost-effective version
  (not suitable for EMC applications)
- Heights: 3 and 6 U
  Depths: 175, 235 and 295 mm
  Other dimensions on request
- Installed load up to 7.5 kg

SIDE PANELS

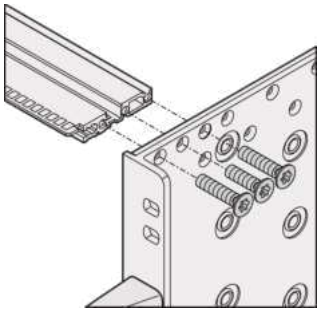

06112056

Example shows:
Side panel type rugged to horizontal rail type rugged

- Aluminium
- Round holes for mounting horizontal rails (depth grid 15 mm)
- Impressions on the inner side of the side panel act as an anti-rotation guard and positioning aid for the horizontal rails
- Square holes (6 x 6 mm) provide universal fixing for components such as backplane shielding; version without square holes available on request
- Only one type of screw driver (T20) is needed for the assembly.
  Torx countersunk screw, M4 x 18; (with thread locking compound)
  Torque side panel - horizontal rail 2.4 Nm;
  Torque side panel - cover plate 1.3 Nm)

08230769

Type R (rugged)

- 19" bracket (3,5mm) is tox-cold welded to side panel (3mm); particularly designed for mechanically demanding environments.
- Shock and vibration tested in compliance with:
  DIN EN 61587 -DL3 up to 25g
  MIL 167,
  MIL 810G,
  MIL 901D.
  Shock and vibration resistant in all three axial directions.
- Heights: 3 and 6 U
  Depths: 175, 235, 275, 277,75, 295 and 355 mm.
  Other dimensions on request
- One EMC shielding concepts for front/rear side:
  Textile EMC gasket (-40°C up to +85°C)
- Installed load up to 25 kg

Subracks – EuropacPRO

SIDE PANELS TYPE F FOR STAINLESS STEEL GASKET

ORDER INFORMATION

			Side panel type F	19" bracket without handle holes	19" bracket with handle holes	19" bracket depth-adjustable	EMC gasket (stainless steel)	Rear angle	Side panel connection
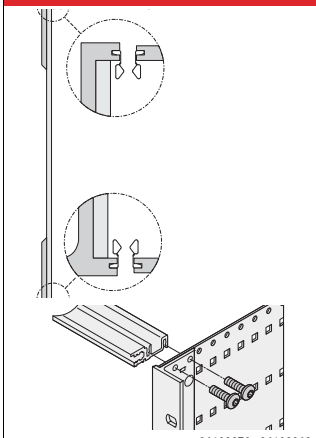 06108070 06108062			06197003 without 19" bracket, Al, 2 mm, passivated, please order 19" bracket and corner profile separately	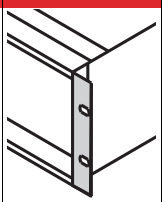 bza45819 with lateral grooves for stainless steel EMC gasket, Al extrusion, rear side etched, front anodised	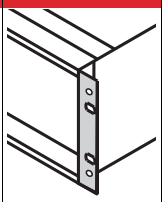 06106050 with lateral grooves for stainless steel EMC gasket, Al extrusion, rear side etched, front anodised please order front handles separately,	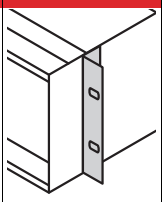 06102501 Al extrusion, passivated	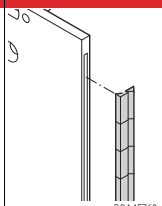 BGA45760 inserted laterally into the grooves of the front panel	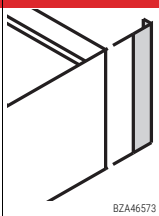 BZA46573 Al extrusion, surface clear passivated; with lateral grooves for stainless steel EMC gasekt; rear hood cannot be mounted simultaneously	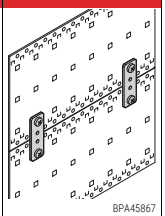 BPA45867 Zn die-cast, incl. fixing material kit, for connecting two by two side panels (on top of each other)
Height U	Depth mm		1 piece	PU 1 pair	PU 1 pair	PU 1 pair	PU 10 pieces	PU 1 pair	PU 4 pieces
3	175		**34560-185**	**24560-197**	**24560-198**	**24560-199**	**21101-705**	**24561-198**	**21101-954**
3	235		**34560-187**						
3	275	1)	**34579-300**						
3	277.75	2)	**34579-002**						
3	295		**34560-189**						
3	355		**34560-191**						
3	415		**34560-193**						
3	475		**34560-195**						
4	175	3)	**34560-285**	**24560-297**	**24560-298**	**24560-299**	**21101-713**	**24561-298**	**21101-954**
4	235	3)	**34560-287**						
4	295	3)	**34560-289**						
4	355	3)	**34560-291**						
4	415	3)	**34560-293**						
4	475	3)	**34560-295**						
6	175		**34560-485**	**24560-497**	**24560-498**	**24560-499**	**21101-707**	**24561-498**	**21101-954**
6	235		**34560-487**						
6	275	1)	**34579-038**						
6	277.75	2)	**34579-012**						
6	295		**34560-489**						
6	355		**34560-491**						
6	415		**34560-493**						
6	475		**34560-495**						
6	970		**34560-496**						
9	175		**34560-785**	**24560-797**	**24560-798**	**24560-799**	**21101-709**	**24561-798**	**21101-954**
9	235		**34560-787**						
9	295		**34560-789**						
9	355		**34560-791**						
9	415		**34560-793**						
Screw, M4 x 14, PU 100 pieces, for fastening horizontal rail to side panel			**24560-130**	**24560-130**	**24560-130**	**24560-130**	–	**24560-130**	–
Screw, M4 x 10, required if guide rails are screwed to slot 1, PU 100 pieces			**24560-155**	**24560-155**	**24560-155**	**24560-155**	–	**24560-155**	–

1) CompactPCI 2) VME64x 3) Grid holes of side panel 3 + 1 U

• View of side panels 3, 4, 6, 9 U see page 6.22

Subracks – EuropacPRO

SIDE PANELS TYPE F FOR TEXTILE EMC GASKET

ORDER INFORMATION

Illustration shows standard assembly, not VME or CompactPCI bus with rear I/O		Side panel type F	19" bracket without handle holes	19" bracket with handle holes	19" bracket depth-adjustable	EMC gasket (textile)	Rear angle	Side panel connection
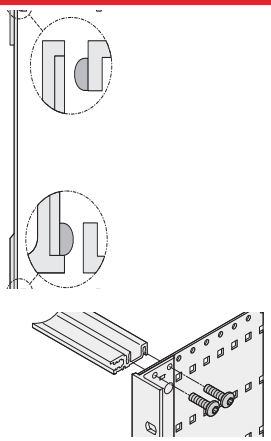 06108054 06108062		06197003 without 19" bracket, Al, 2 mm, passivated, please order 19" bracket and corner profile separately	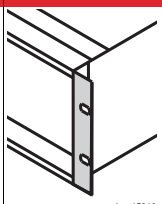 bza45819 Al extrusion for textile EMC gasket rear side etched, front anodised	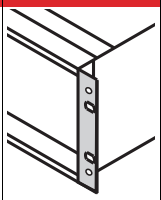 06106050 Al extrusion for textile EMC gasket, rear side etched, front anodised, please order front handles separately, see page 6.27	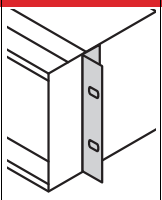 06102501 Al extrusion, passivated	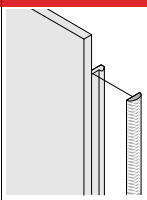 04602054 textile gasket, core: foam, sleeve: textile cladding with CuNi coating, UL 94 V-0	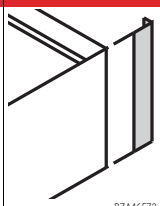 BZA46573 Al extrusion, etched; for textile EMC gasket	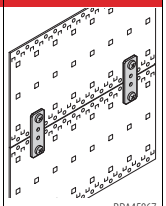 BPA45867 Zn die-cast, incl. fixing material kit, for connecting two by two side panels (on top of each other)
Height U	Depth mm	1 piece	PU 1 pair	PU 1 pair	PU 1 pair	PU 10 pieces	PU 1 pair	PU 4 pieces
3	175	**34560-185**	**24564-197**	**24564-198**	**24560-199**	**21101-853**	**24564-199**	**21101-954**
3	235	**34560-187**						
3	275 1)	**34579-300**						
3	277.75 2)	**34579-002**						
3	295	**34560-189**						
3	355	**34560-191**						
3	415	**34560-193**						
3	475	**34560-195**						
4	175 3)	**34560-285**	**24564-297**	**24564-298**	**24560-299**	**21101-858**	**24564-299**	**21101-954**
4	235 3)	**34560-287**						
4	295 3)	**34560-289**						
4	355 3)	**34560-291**						
4	415 3)	**34560-293**						
4	475 3)	**34560-295**						
6	175	**34560-485**	**24564-497**	**24564-498**	**24560-499**	**21101-855**	**24564-499**	**21101-954**
6	235	**34560-487**						
6	275 1)	**34579-038**						
6	277.75 2)	**34579-012**						
6	295	**34560-489**						
6	355	**34560-491**						
6	415	**34560-493**						
6	475	**34560-495**						
6	970	**34560-496**						
9	175	**34560-785**	**24564-797**	**24564-798**	**24560-799**	**21101-859**	**24564-799**	**21101-954**
9	235	**34560-787**						
9	295	**34560-789**						
9	355	**34560-791**						
9	415	**34560-793**						
Screw, M4 x 14, PU 100 pieces, for fastening horizontal rail to side panel		**24560-130**	**24560-130**	**24560-130**	**24560-130**	–	**24560-130**	–
Screw, M4 x 10, required if guide rails are screwed to slot 1, PU 100 pieces		**24560-155**	**24560-155**	**24560-155**	**24560-155**	–	**24560-155**	–

1) CompactPCI 2) VME64x 3) Grid holes of side panel 3 + 1 U

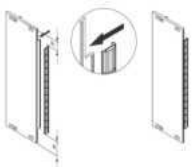

EMC gasket stainless steel, for U-shaped front panel

1 Kit, 3U, 10pcs **21102-105**
1 Kit, 4U, 10pcs **21102-113**
1 Kit, 6U, 10pcs **21102-107**
1 Kit, 9U, 10pcs **21102-109**

Part number in bold face type: ready for despatch within 2 working days
Part number in normal type: ready for despatch within 10 working days

Subracks – EuropacPRO

SIDE PANELS TYPE H FOR STAINLESS STEEL EMC GASKET

ORDER INFORMATION

			Side panel type H for stainless steel EMC gasket			Rear angle	Side panel connection
			without handle holes	with handle holes	EMC gasket (stainless steel)		
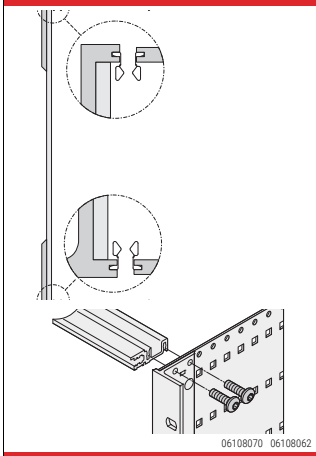 06108070 06108062			06197004 for high mechanical demands, 19" bracket, tox-cold welded, Al, 2 mm, clear passivated, front anodised	06107001 for high mechanical demands, 19" bracket, tox-cold welded, Al, 2 mm, clear passivated, front anodised, please order front handles separately see page 6.27	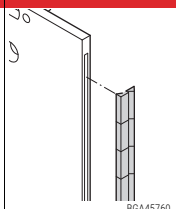 BGA45760 inserted laterally into the grooves of the front panel	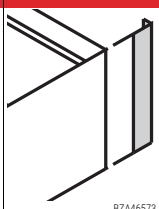 BZA46573 Al extrusion, surface clear passivated; with lateral grooves for stainless steel EMC gasekt; rear hood cannot be mounted simultaneously	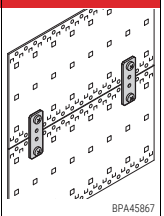 BPA45867 Zn die-cast, incl. fixing material kit, for connecting two by two side panels (on top of each other)
Height U	Depth mm		PU 1 pair	PU 1 pair	PU 10 pieces	PU 1 pair	PU 4 pieces
3	175		**24566-125**	**24567-125**	**21101-705**	**24561-198**	**21101-954**
3	235		**24566-127**	**24567-127**			
3	275	1)	–	–			
3	277.75	2)	–	–			
3	295		**24566-129**	**24567-129**			
3	355		**24566-131**	**24567-131**			
3	415		–	–			
3	475		–	–			
4	175	3)	–	–	–	–	–
4	235	3)					
4	295	3)					
4	355	3)					
4	415	3)					
4	475	3)					
6	175		**24566-425**	**24567-425**	**21101-707**	**24561-498**	**21101-954**
6	235		**24566-427**	**24567-427**			
6	275	1)	–	–			
6	277.75	2)	–	–			
6	295		**24566-429**	**24567-429**			
6	355		**24566-431**	**24567-431**			
6	415		–	–			
6	475		–	–			
6	970		–	–			
9	175		–	–	–	–	–
9	235						
9	295						
9	355						
9	415						
Screw, M4 x 14, PU 100 pieces, for fastening horizontal rail to side panel			**24560-130**	**24560-130**	–	**24560-130**	–
Screw, M4 x 10, required if guide rails are screwed to slot 1, PU 100 pieces			**24560-155**	**24560-155**	–	**24560-155**	–

1) CompactPCI 2) VME64x 3) Grid holes of side panel 3 + 1 U

Subracks – EuropacPRO

SIDE PANELS TYPE H FOR TEXTILE EMC GASKET

ORDER INFORMATION

Illustration shows standard assembly, not VME or CompactPCI bus with rear I/O		Side panel type H for textile EMC gasket without handle holes	with handle holes	EMC gasket (textile)	Rear angle	Side panel connection
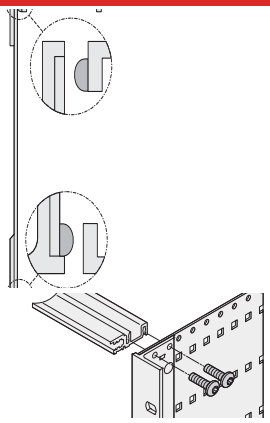 06108070 06108062		06197004 for high mechanical	06107001 for high mechanical demands, 19" bracket,	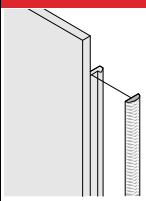 04602054 textile gasket, core: foam, sleeve: textile cladding with CuNi coating, UL 94 V-0	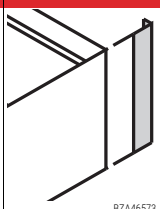 BZA46573 Al extrusion, etched; for textile EMC gasket	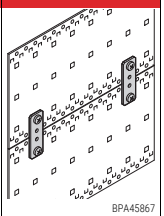 BPA45867 Zn die-cast, incl. fixing material kit, for connecting two by two side panels (on top of each other)
Height U	Depth mm	PU 1 pair	PU 1 pair	PU 10 pieces	PU 1 pair	PU 4 pieces
3	175	**24564-145**	**24566-145**	**21101-853**	**24564-199**	**21101-954**
3	235	**24564-147**	**24566-147**			
3	275 1)	–	–			
3	277.75 2)	–	–			
3	295	**24564-149**	**24566-149**			
3	355	**24564-151**	**24566-151**			
3	415	–	–			
3	475	–	–			
4	175 3)	–	–	–	–	–
4	235 3)					
4	295 3)					
4	355 3)					
4	415 3)					
4	475 3)					
6	175	**24564-445**	**24566-445**	**21101-855**	**24564-499**	**21101-954**
6	235	**24564-447**	**24566-447**			
6	275 1)	–	–			
6	277.75 2)	–	–			
6	295	**24564-449**	**24566-449**			
6	355	**24564-451**	**24566-451**			
6	415	–	–			
6	475	–	–			
6	970	–	–			
9	175	–	–	–	–	–
9	235					
9	295					
9	355					
9	415					
Screw, M4 x 14, PU 100 pieces, for fastening horizontal rail to side panel		**24560-130**	**24560-130**	–	**24560-130**	–
Screw, M4 x 10, required if guide rails are screwed to slot 1, PU 100 pieces		**24560-155**	**24560-155**	–	**24560-155**	–

1) CompactPCI 2) VME64x 3) Grid holes of side panel 3 + 1 U

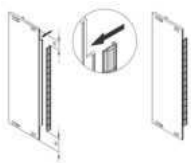

EMC gasket stainless steel, for U-shaped front panel

1 Kit, 3U, 10pcs **21102-105**
1 Kit, 4U, 10pcs **21102-113**
1 Kit, 6U, 10pcs **21102-107**
1 Kit, 9U, 10pcs **21102-109**

Part number in bold face type: ready for despatch within 2 working days
Part number in normal type: ready for despatch within 10 working days

SIDE PANELS TYPE L

ORDER INFORMATION

		Side panel type L	Front cover	Collar screw with slot for assembly of front cover	Sleeves for assembly of front cover	Side panel connection
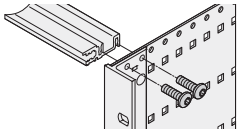 06108062		06197002 Al, 2 mm, passivated	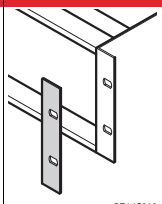 BZA45810 for decorative finish of 19" bracket, Al, 2 mm, anodised	136752559 M6 x 16, St, nickel-plated	135436402 PPE, black	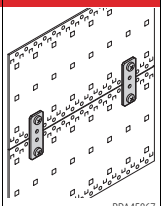 BPA45867 Zn die-cast, incl. fixing material kit, for connecting two by two side panels (on top of each other)
Height U	Depth mm	1 piece	1 piece	PU 100 pieces	PU 100 pieces	PU 4 pieces
3	175	**34561-185**	**34561-197**	**21100-565**	**21100-566**	**21101-954**
3	235	**34561-187**				
3	275 1)	–				
3	277.75 2)	–				
3	295	**34561-189**				
3	355	–				
3	415	–				
3	475	–				
4	175 3)	–	–	–	–	–
4	235 3)					
4	295 3)					
4	355 3)					
4	415 3)					
4	475 3)					
6	175	**34561-485**	**34561-497**	**21100-565**	**21100-566**	**21101-954**
6	235	**34561-487**				
6	275 1)	–				
6	277.75 2)	–				
6	295	**34561-489**				
6	355	–				
6	415	–				
6	475	–				
6	970	–				
9	175	–	–	–	–	–
9	235					
9	295					
9	355					
9	415					
Screw, M4 x 14, PU 100 pieces, for fastening horizontal rail to side panel		**24560-130**	–	–	–	–
Screw, M4 x 10, required if guide rails are screwed to slot 1, PU 100 pieces		**24560-155**	–	–	–	–

1) CompactPCI 2) VME64x 3) Grid holes of side panel 3 + 1 U

Subracks – EuropacPRO

FRONT HANDLES, WALL-MOUNTING BRACKETS

ORDER INFORMATION

Front handle Al extrusion, anodised / black, width 12.2mm, load-carrying capacity 30 kg				Front handle clear anodised, straight version	black anodised, straight version	clear anodised, angled version	Wall-mounting bracket
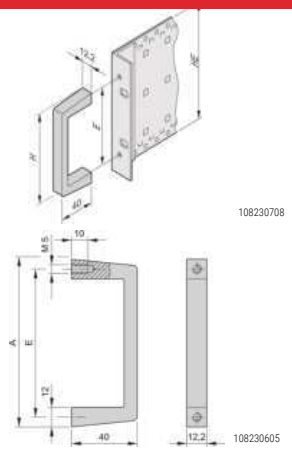							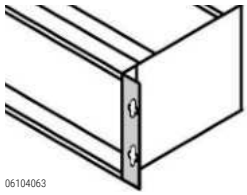 Al, 2.5 mm, passivated; bolted to subrack in place of the 19" bracket
Height U	Depth mm	A = H mm	E mm	1 piece (SPQ 10)[1]	1 piece (SPQ 10)[1]	1 piece (SPQ 10)[1]	PU 1 pair
3	175	102	88.0	**10501-005**	**10501-026**	**10501-020**	**24562-197**
3	235	102	88.0				
3	275	102	88.0				
3	277.75	102	88.0				
3	295	102	88.0				
3	355	102	88.0				
3	415	102	88.0				
3	475	102	88.0				
4	175	146	133.4	**10501-018**	–	**10501-021**	24562-297
4	235	146	133.4				
4	295	146	133.4				
4	355	146	133.4				
4	415	146	133.4				
4	475	146	133.4				
6	175	249	235.0	**10501-008**	**10501-029**	**10501-022**	**24562-497**
6	235	249	235.0				
6	275	249	235.0				
6	277.75	249	235.0				
6	295	249	235.0				
6	355	249	235.0				
6	415	249	235.0				
6	475	249	235.0				
6	970	249	235.0				
9	175	249	235.0	**10501-00**	**10501-029**	**10501-022**	24562-797
9	235	249	235.0				
9	295	249	235.0				
9	355	249	235.0				
9	415	249	235.0				
Screw M5 x 12, PU 100 pieces				**24560-183**	**24560-183**	**24560-183**	–
Screw M5 x 12, PU 4 pieces				**24560-18**	**24560-182**	**24560-182**	–
Screw, M4 x 14, PU 100 pieces				–	–	– –	**24560-130**

1) SPQ (standard pack quantity): Part number includes 1 piece, but delivery is exclusively made in standard pack quantity (SPQ); please order at least the SPQ quantity or a multiple

Part number in bold face type: ready for despatch within 2 working days
Part number in normal type: ready for despatch within 10 working days

Subracks – EuropacPRO

HORIZONTAL RAILS

06197007

light

06197008

heavy

06112004

rugged

- Aluminium profile, surface anodised, conductive contact surfaces for EMC gaskets
- The horizontal rail is marked with sequential numbering (for sizes > 28 HP) to facilitate positioning of the guide rails
- Horizontal rails are fixed to the side panel using M4 bolts with torx 20 drive
- There are 3 different horizontal rails for different loading levels
  - light, for up to 7.5 kg
  - heavy, for 7.5 kg to 15 kg
  - rugged, for 15 kg to approx. 25kg

MOUNTING POSITION OF THE HORIZONTAL RAILS

PCB as deep as side panel

front rear

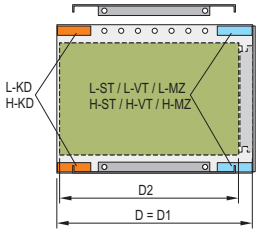

06112081

160, 220, 280 mm, ...

Cabling space behind backplane

front rear

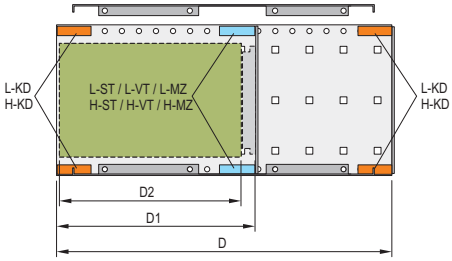

06112083

160, 220, 280 mm, ...

Rear I/O installation (CompactPCI, VME64x applications)

front rear

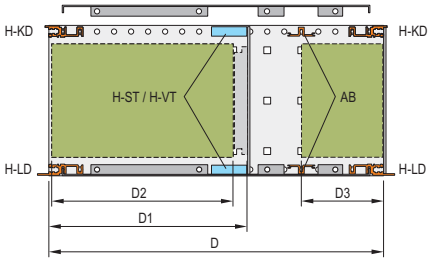

06112085

160 mm/80 mm

3 U

6 U = 3 U + 3 U

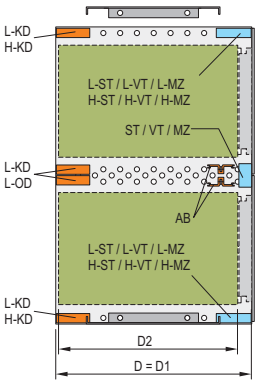

06112088

160, 220, 280 mm, ...

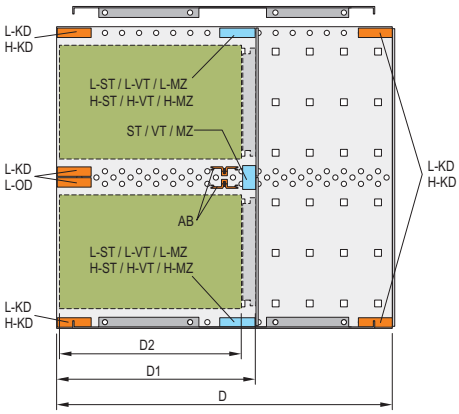

06112087

160, 220, 280 mm, ...

6 U

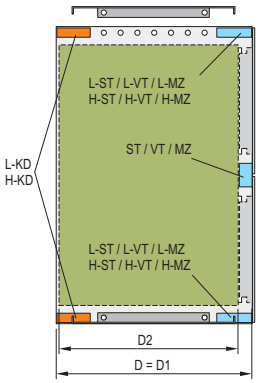

06112082

160, 220, 280 mm, ...

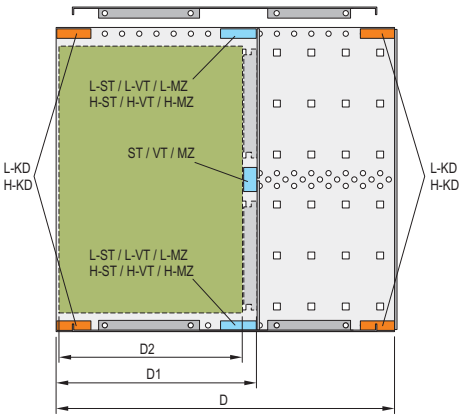

06112084

160, 220, 280 mm, ...

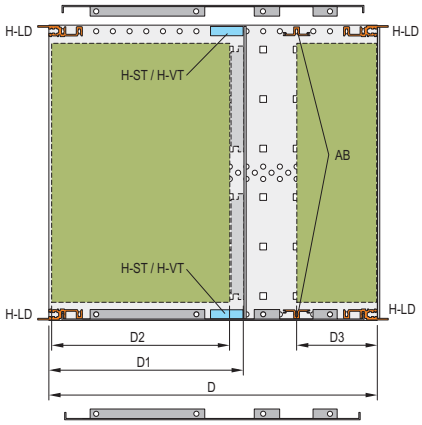

06112086

160 mm/80 mm

Subracks – EuropacPRO

FRONT HORIZONTAL RAILS

Assembly 3 U, 2 x 3 U, 6 U

"light" (L)

06197007

"heavy" (H)

06197008

"heavy" (H)

06197009

3 U/6 U

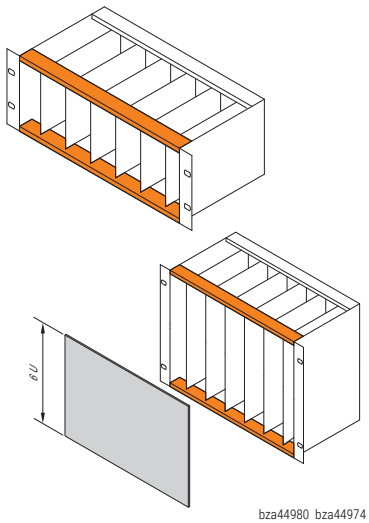

bza44980 bza44974

Short lip

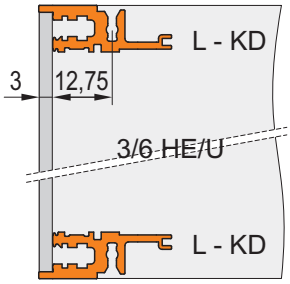

06105060

Short lip

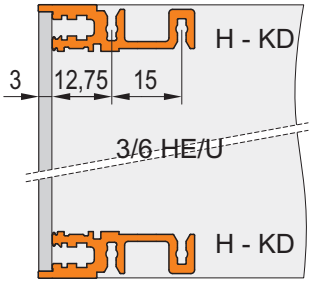

06105061

Long lip

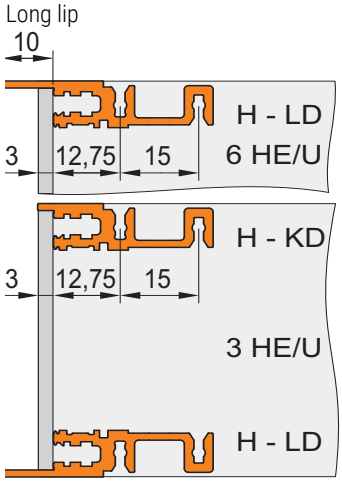

06108063

2 x 3 U

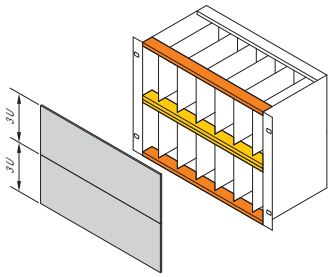

bza44972

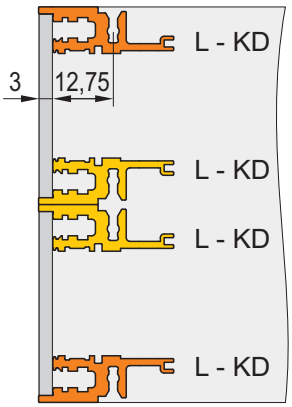

06105062

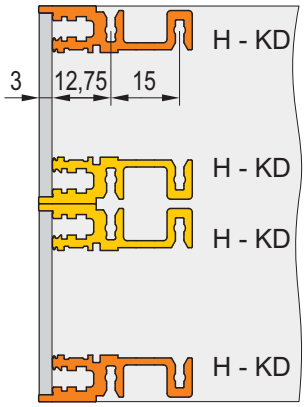

06105063

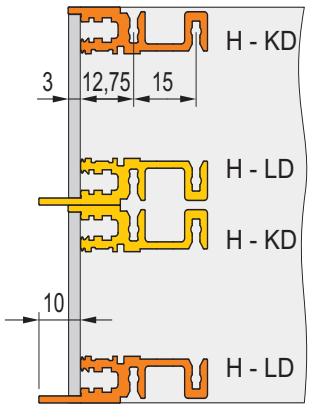

06108064

2 x 3 U, 6 U

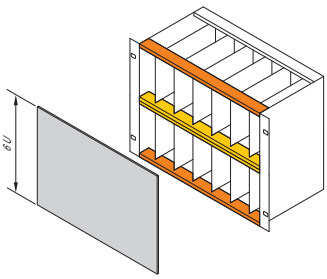

06105059

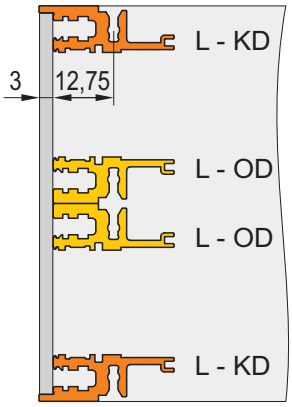

06105064

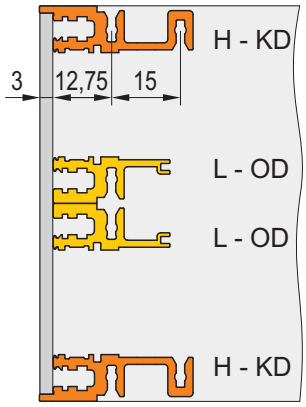

06105065

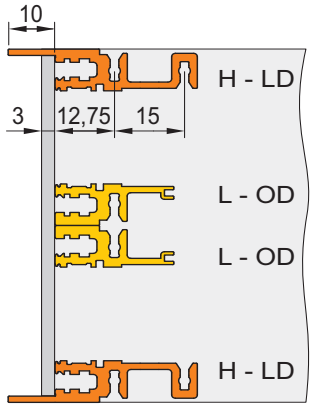

06108065

L-OD = Light - without lip, L-KD = Light - short lip, H-KD = Heavy - short lip, H-LD = Heavy - long lip

Part number in bold face type: ready for despatch within 2 working days
Part number in normal type: ready for despatch within 10 working days

FRONT HORIZONTAL RAILS

ORDER INFORMATION

		"light" Type L-OD without lip	"light" Type L-KD short lip	"heavy" Type H-KD short lip	With long lip for insertion/ extraction of CompactPCI and VME64x boards "heavy" Type H-LD long lip
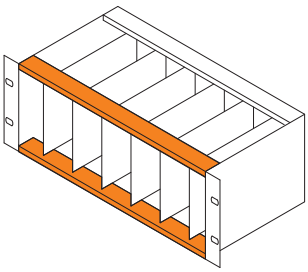 bza44980		 06197006	 06197007	 06197008	 06197009
With HP markings from 28 HP, Al extrusion, anodised finish, conductive contact surface		Al extrusion, anodised finish, conductive contact surface, with printed HP markings without lip: 2 x 3 U installation and continuous 6 U front panel	Al extrusion, anodised finish, conductive contact surface, with printed HP markings short lip: horizontal rail and front panel form a single plane	Al extrusion, anodised finish, conductive contact surface, with printed HP markings short lip: horizontal rail and front panel form a single plane	Al extrusion, anodised finish, conductive contact surface, with printed HP markings long lip: for insertion/extraction of CompactPCI or VME64x boards
Usable length HP	Length mm	1 piece (SPQ 10)[1]	1 piece (SPQ 10)[1]	1 piece (SPQ 10)[1]	1 piece (SPQ 10)[1]
20	106.68	**34560-020**	**34560-120**	**34560-220**	**34560-320**
28	147.32	**34560-028**	**34560-128**	**34560-228**	**34560-328**
40	208.28	**34560-040**	**34560-140**	**34560-240**	**34560-340**
42	218.44	**34560-042**	**34560-142**	**34560-242**	**34560-342**
63	325.12	**34560-063**	**34560-163**	**34560-263**	**34560-363**
84	431.80	**34560-084**	**34560-184**	**34560-284**	**34560-384**
–	1000	**34560-001**	**34560-101**	**34560-201**	**34560-301**
Screw, M4 x 14, PU 100 pieces		**24560-130**	**24560-130**	**24560-130**	**24560-130**
Screw, M4 x 10, required if guide rails are screwed to slot 1, PU 100 pieces		–	–	**24560-155**	**24560-155**
Threaded inserts see page		6.35	6.35	6.35	6.35

1) SPQ (standard pack quantity): Part number includes 1 piece, but delivery is exclusively made in standard pack quantity (SPQ);
please order at least the SPQ quantity or a multiple
"light": loading capacity up to approx. 7.5 kg; "heavy": loading capacity > 7.5 kg

NOTE

- 1000 mm version without M4 thread to front, without printed markings and without notch for 19"-bracket
- Rugged horizontal rails with 3 fixing holes see section "Rugged Subracks", page 6.99

Subracks – EuropacPRO

REAR HORIZONTAL RAILS

Indirect backplane mounting (with insulation strip)

04400001

Direct backplane mounting

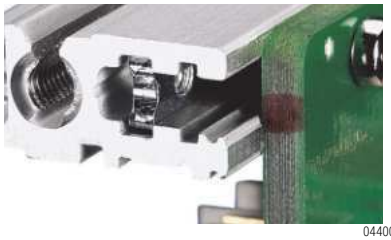

04400002

Connector fitting with Z

04400003

"light"

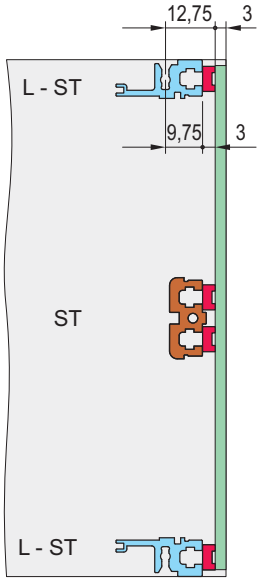

06105072

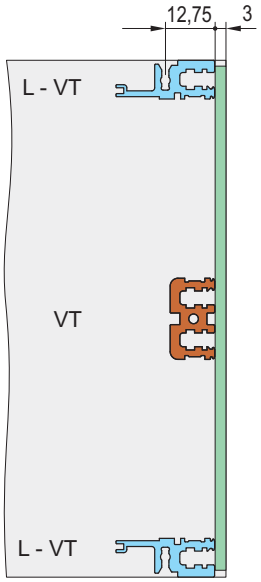

06105073

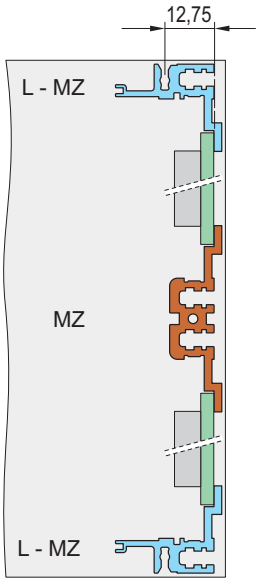

06105071

"heavy"

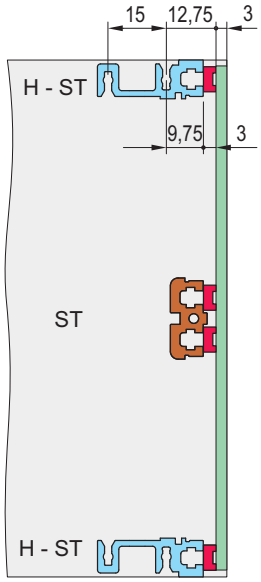

06108066

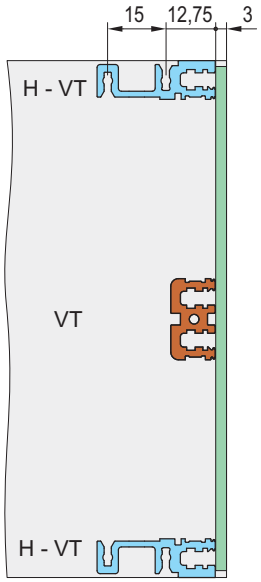

06108067

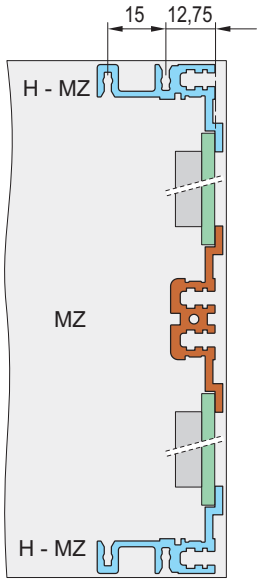

06108068

ST = standard, L = light, H = heavy

VT = depth-offset, L = light, H = heavy

MZ = with Z-rail, L = light, H = heavy

Part number in bold face type: ready for despatch within 2 working days
Part number in normal type: ready for despatch within 10 working days

Subracks – EuropacPRO

REAR HORIZONTAL RAILS, TOP AND BOTTOM

ORDER INFORMATION

		For indirect backplane mounting with insulation strip		For direct backplane mounting		For direct fixing of connectors in accordance with EN 60603-2 (DIN 41612)	
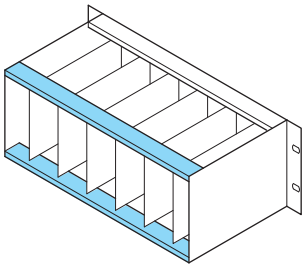 06105074		04400001		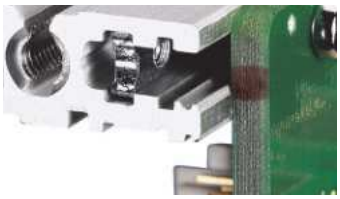 04400002		04400003	
		"light" Type L-ST standard	"heavy" Type H-ST standard	"light" Type L-VT + 3 mm	"heavy" Type H-VT + 3 mm	"light" Type L-MZ with Z-rail	"heavy" Type H-MZ with Z-rail
		06197010	06197011	06197011	06197013	06197014	06197015
With HP markings from 28 HP, Al extrusion, anodised finish, conductive surface		Al extrusion, anodised surface, conductive contact surface, with printed HP markings	Al extrusion, anodised surface, conductive contact surface, with printed HP markings	Al extrusion, anodised surface, conductive contact surface, with printed HP markings	Al extrusion, anodised surface, conductive contact surface, with printed HP markings	Al extrusion, anodised surface, conductive contact surface, with printed HP markings	Al extrusion, anodised surface, conductive contact surface, with printed HP markings
Usable length HP	Length mm	1 piece (SPQ 10)[1]	1 piece (SPQ 10)[1]	1 piece (SPQ 10)[1]	1 piece (SPQ 10)[1]	1 piece (SPQ 10)[1]	1 piece (SPQ 10)[1]
20	106.68	**34560-420**	**34560-520**	**34560-620**	**34560-720**	**34560-820**	**34560-920**
28	147.32	**34560-428**	**34560-528**	**34560-628**	**34560-728**	**34560-828**	**34560-928**
40	208.28	**34560-440**	**34560-540**	**34560-640**	**34560-740**	**34560-840**	**34560-940**
42	218.44	**34560-442**	**34560-542**	**34560-642**	**34560-742**	**34560-842**	**34560-942**
63	325.12	**34560-463**	**34560-563**	**34560-663**	**34560-763**	**34560-863**	**34560-963**
84	431.80	**34560-484**	**34560-584**	**34560-684**	**34560-784**	**34560-884**	**34560-984**
–	1000	**34560-401**	**34560-501**	**34560-601**	**34560-701**	**34560-801**	–
Screw, M4 x 14, PU 100 pieces, for fastening horizontal rail to side panel		**24560-130**	**24560-130**	**24560-130**	**24560-130**	**24560-130**	**24560-130**
Screw, M4 x 10, required if guide rails are screwed to slot 1, PU 100 pieces		–	**24560-155**	–	**24560-155**	–	**24560-155**
Perforated rail for connector mounting with insulation strip see page		6.38	6.38	–	–	–	–
Z-rail for connector mounting without insulation strip see page		6.38	6.38	–	–	–	–
Insulation strips see page		6.37	6.37	–	–	–	–
Threaded inserts see page		6.37	6.37	6.37	6.37	6.37	6.37

1) SPQ (standard pack quantity): Part number includes 1 piece, but delivery is exclusively made in standard pack quantity (SPQ); please order at least the SPQ quantity or a multiple
"light": loading capacity up to approx. 7.5 kg; "heavy": loading capacity > 7.5 kg

NOTE

- 1000 mm version without M4 thread to front, without printed markings and without notch for 19"-bracket
- Rugged horizontal rails with 3 fixing holes see section "Rugged Subracks", page 6.99

Subracks – EuropacPRO

REAR HORIZONTAL RAILS, CENTRE, FOR 6 U

ORDER INFORMATION

		For indirect backplane mounting with insulation strip	For direct backplane mounting	For direct fixing of connectors in accordance with EN 60603-2 (DIN 41612)
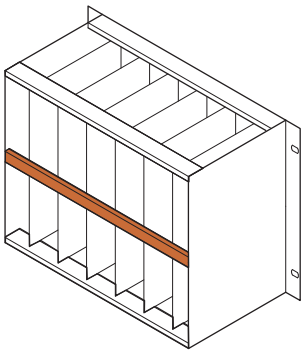 06108090		04400001 Typ ST 06197016 Al extrusion, anodised surface, conductive contact surface, without printed markings	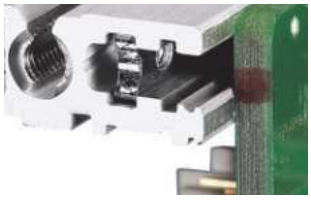 04400002 Typ VT 06197017 Al extrusion, anodised surface, conductive contact surface, without printed markings	04400003 Typ MZ 06197018 Al extrusion, anodised surface, conductive contact surface, without printed markings
Usable length HP	Length mm	1 piece (SPQ 10)[1]	1 piece (SPQ 10)[1]	1 piece (SPQ 10)[1]
20	106.68	**34561-020**	**34561-120**	**34561-220**
28	147.32	**34561-028**	**34561-128**	**34561-228**
40	208.28	**34561-040**	**34561-140**	**34561-240**
42	218.44	**34561-042**	**34561-142**	**34561-242**
63	325.12	**34561-063**	**34561-163**	**34561-263**
84	431.80	**34561-084**	**34561-184**	**34561-284**
–	1000	**34561-001**	**34561-101**	**34561-201**
Screw, M4 x 14, PU 100 pieces, for fastening horizontal rail to side panel		**24560-130**	**24560-130**	**24560-130**
Insulation strips see page		6.37	–	–
Threaded inserts see page		6.37	6.37	6.37

1) SPQ (standard pack quantity): Part number includes 1 piece, but delivery is exclusively made in standard pack quantity (SPQ); please order at least the SPQ quantity or a multiple
"light": loading capacity up to approx. 7.5 kg; "heavy": loading capacity > 7.5 kg

NOTE

- All horizontal rails without printed markings
- 1000 mm version without M4 thread to front

Part number in bold face type: ready for despatch within 2 working days
Part number in normal type: ready for despatch within 10 working days

HORIZONTAL RAILS (TYPE AB) FOR REAR I/O APPLICATIONS

ORDER INFORMATION

		For suppporting guide rails in the rear section	For CompactPCI in rear I/O area with notch
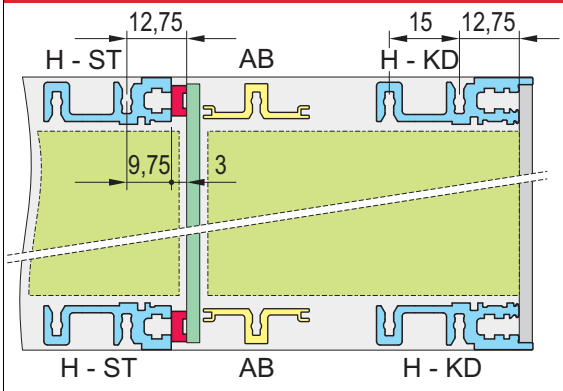 06108069		06108009 Typ AB 06197019 Al extrusion, anodised surface, conductive contact surface; horizontal rail type AB (AB = support) is required to fix the 80 mm rear I/O boards; without printed markings	06108009 Typ AB Al extrusion, anodised surface, conductive contact surface; horizontal rail type AB with notch for Compact PCI Rear / IO (AB = support) is required to fix the 80 mm rear I/O boards; without printed markings
Usable length HP	Length mm	1 piece (SPQ 10)[1]	1 piece (SPQ 10)[1]
20	106.68	**34561-520**	–
28	147.32	**34561-528**	–
40	208.28	**34561-540**	–
42	218.44	**34561-542**	**34579-042**
63	325.12	**34561-563**	–
84	431.80	**34561-584**	–
–	1000	**34561-501**	**34579-040**
Screw, M4 x 14, PU 100 pieces, for fastening horizontal rail to side panel		**24560-130**	**24560-130**

1) SPQ (standard pack quantity): Part number includes 1 piece, but delivery is exclusively made in standard pack quantity (SPQ); please order at least the SPQ quantity or a multiple
"light": loading capacity up to approx. 7.5 kg; "heavy": loading capacity > 7.5 kg

NOTE

- All horizontal rails without printed markings
- 1000 mm version without M4 thread to front

Subracks – EuropacPRO

THREADED INSERTS, PERFORATED STRIPS, INSULATION STRIPS

ORDER INFORMATION

	Threaded insert M2.5	Threaded insert M3	Perforated strip (item 1)	Insulation strip
	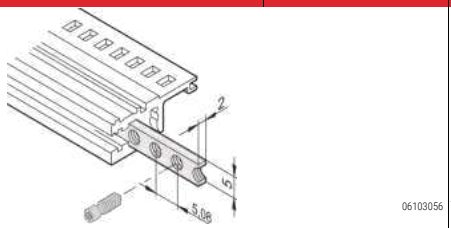		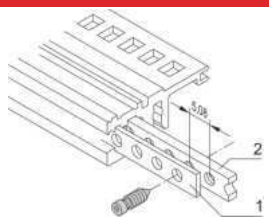	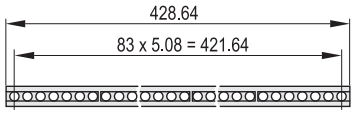
	required for fixing the front panel to the horizontal rail; St, zinc-plated; use collar screw 12.3 mm, see page 6.66		for centring shielded plug-in units, Al, 1 mm, please order grub screw (torque: 0,37Nm) separately	for insulated backplane mounting; PC, UL 94 V-0, grey

Usable length HP	Threaded insert Length mm	1 piece (SPQ 10)[1]	1 piece (SPQ 10)[1]	Perforated strip Length mm	1 piece (SPQ 10)[1]	Insulation strip Length mm	PU 10 pieces
20	106.18	**34561-320**	–	106.48	**30845-189**	101.50	**24560-820**
28	146.82	**34561-328**	–	147.12	**30845-197**	144.20	**24560-828**
40	207.78	**34561-340**	–	208.08	**30845-209**	205.12	**24560-840**
42	217.94	**34561-342**	–	218.24	**30845-211**	210.40	**24560-842**
63	324.62	**34561-363**	–	324.92	**30845-232**	316.88	**24560-863**
84	431.30	**34561-384**	**34561-484**	431.60	**30845-253**	428.64	**24560-884**
196	1000.26	**34565-196**	–	1000.56	**34565-396**		–

Accessories

Grub screw M2.5 x 8,PU 100 pieces	**21100-276**	–		–		–
Grub screw M2.5 x 9, Torx 8 PU 100 pieces	–	–		**21102-980**		–
Grub screw M3 x 8,PU 100 pieces	–	**21100-646**		–		–

1) SPQ (standard pack quantity): Part number includes 1 piece, but delivery is exclusively made in standard pack quantity (SPQ); please order at least the SPQ quantity or a multiple

2) Part no. includes one packing unit (PU); delivery is exclusively made in PU

Part number in bold face type: ready for despatch within 2 working days
Part number in normal type: ready for despatch within 10 working days

ORDER INFORMATION

		Z-rail for connectors DIN EN 60603-2, DIN 41612 item 1	31-pin, DIN 41617	Perforated rail EN 606032, DIN 41612 item 1
		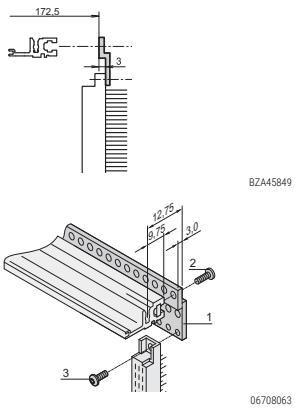 for connector mounting on ST horizontal rails, please order threaded inserts and screw separately	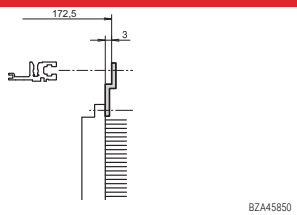 for connector mounting on ST horizontal rails, please order threaded inserts and screw separately	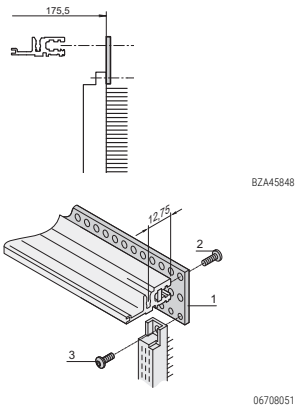 for connector mounting on VT horizontal rails, please order threaded inserts and screw separately
Usable length HP	Length mm	1 piece	1 piece	PU 4 pieces
4	20.32	**30822-166**	–	**20822-052**
8	40.64	**30822-170**	–	**20822-053**
20	101.60	**30822-025**	–	**20822-051**
28	142.24	**30822-033**	–	**20822-049**
40	203.20	**30822-045**	**30819-763**	**20822-046**
42	213.36	**30822-047**	–	**20822-050**
60	304.80	**30822-065**	**30819-783**	**20822-047**
84	426.72	**30822-089**	**30819-808**	**20822-048**
Item 2, torx panhead screw to fix connector to perforated rail,, M2.5 × 7, PU 100 pieces		**24560-147**	**24560-147**	**24560-147**
Item3, torx panhead screw, to fix perforated rails to horizontal rail, M2.5 × 10, PU 100 pieces		–	–	**24560-148**

GUIDE RAILS

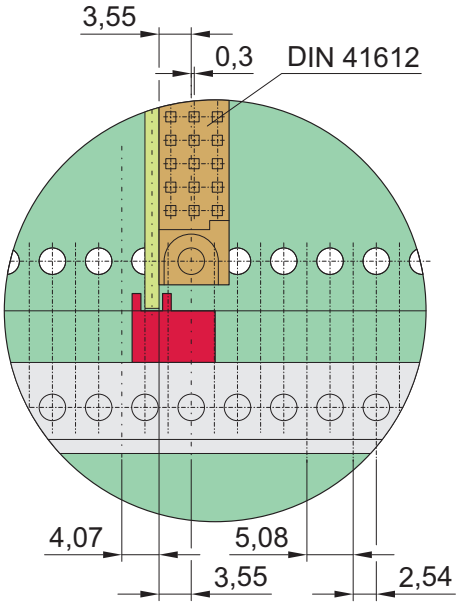

Front view: position of guide rails to connector (EN 60603-2/ DIN 41612)

Guide rails form the interface between the subrack mechanics and the sub-assemblies (PCBs, plug-in units, frame-type plug-in units, ...).

Guide rails for standard applications are 2 HP wide. Guide rails with coding (e.g. for CompactPCI or VME64bus applications) are 4 HP wide.

There are groove widths of 2 mm and 2.5 mm.

The guide rails are clipped into the rectangular cut-outs of the horizontal rails. They can additionally be bolted to the horizontal rail (type H only) for higher shock and vibration requirements.

The printed HP markings on the horizontal rail (28 HP and above) allow the rails to be fitted in the correct position easily (position of sub-assembly = "number in viewing window" or in front of the arrow marking on the guide rails).

Applications for guide rails

For plug-in units and frame-type plug-in units (with front panels) (standard type)

06102005

For plug-in units and frame type plug-in units or for PCBs without their own front panel (accessory type or robust version)

For CompactPCI or VME64x plug-in units (type IEEE with coding; frame-type plug-in units cannot be fitted)

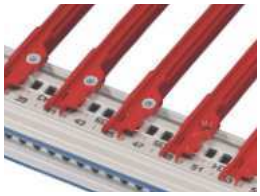

06104009

For plug-in drive unit modules or PCBs in 4.4" (111.7 mm) height (type 4.4")

06112022

Rugged guide rails to accommodate conduction cooled assembly (CCA) adaptor

Accessories:
- ESD clip
- Keying/coding pegs
- Board locking

Part number in bold face type: ready for despatch within 2 working days
Part number in normal type: ready for despatch within 10 working days

GUIDE RAILS FOR PLUG-IN UNITS AND MODULES, ONE-PIECE, GROOVE WIDTH 2 MM AND 2.5 MM

ORDER INFORMATION

			For plug-in units and frame type plug-in units Type: **Standard**		Type **Standard**, with DIN connector fixing
Assembly - can be clipped into Al extruded horizontal rails - can be clipped into 1.5 mm thick plates **Storage temperature** from -40 °C ... 130 °C **Colors of Plastic material** red: RAL 3000 grey: RAL 7016			 136815561 up to 220 mm length, PC, UL 94 V-0; from 280 mm length, multi-piece, end piece PC, UL 94 V-0, central section Al extrusion	PC, UL 94 V-0	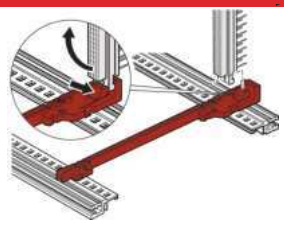 06101501 PBT, UL 94 V-0, red, connector is clipped directly onto the guide rails; for euroboards only, 100 x 160 mm or 100 x 220 mm
Board length mm	Groove width mm	Colour mm	PU 10 pieces[2]	1 piece (SPQ 50)[1]	1 pair (SPQ 10)[1]
70	2	red	–	**34568-230**	–
70	2	grey	–	–	–
160	2	red	**24568-361**	**64568-001**	**64560-074**
220	2	red	**24568-362**	**64568-002**	**64560-075**
280	2	red / silver	**24568-379**	–	–
340	2	red /silver	**24568-380**	–	–
160	2.5	red	–	**64568-096**	–
220	2.5	red	–	**64568-098**	–

Accessories

Retention screw, PU 100 pieces; Torque max. 0.2 Nm 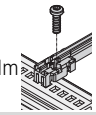	**24560-141**	**24560-141**	**24560-141**
ESD clip, PU 50 pieces	**24560-255**	**24560-255**	**24560-255**

1) SPQ (standard pack quantity): Part number includes 1 piece, but delivery is exclusively made in standard pack quantity (SPQ); please order at least the SPQ quantity or a multiple

2) Part no. includes one packing unit (PU); delivery is exclusively made in PU

Description of accessories see from page 6.47

Subracks – EuropacPRO

GUIDE RAILS TYPE "ACCESSORY", ONE-PIECE, GROOVE WIDTH 2 MM AND 2.5 MM

ORDER INFORMATION

	Guide railsType Accessory		Guide railsType Accessory strengthened	for heavy modules, Al extrusion, silver, robust version
Assembly - can be clipped into Al extruded horizontal rails - can be clipped into 1.5 mm thick plates **Storage temperature** from -40 °C ... +130 °C **Colors of Plastic Material** red: RAL 3000 grey: RAL 7016	 125626047 up to 280 mm length, PC, UL 94 V-0; > 280 mm length, multi-piece, end piece PC, UL 94 V-0, middle section Al extrusion		 124624420 PC, UL 94 V-0, red; support beam of guide rails adds to strengthening	 06102005 Al extrusion; is screwed to horizontal rail "heavy" with retention screws
Board length mm / Groove width mm / Colour	PU 10 pieces[2]	1 piece (SPQ 50)	1 piece (SPQ 50)	1 piece (SPQ 10)[1]
100 / 2 / red	–	**64568-082**	–	–
160 / 2 / red	**24568-363**	**64568-005**	**64568-076**	–
160 / 2 / grey/silver	–	**64568-055**	–	**34562-881**
220 / 2 / red	**24568-364**	**64568-006**	**64568-078**	–
220 / 2 / grey/silver	–	**64568-166**	–	**34562-882**
280 / 2 / red/silver	**24568-381**	–	**64568-080**	**34562-883**
340 / 2 / red/silver	**24568-382**	–	–	**34562-884**
400 / 2 / red/silver	–	–	–	**34562-885**
160 / 2.5 / red/silver	–	**64568-100**	**64568-118**	**34564-881**
220 / 2.5 / red/silver	–	**64568-102**	**64568-119**	**34564-882**
280 / 2.5 / red/silver	–	–	**64568-120**	**34564-883**
340 / 2.5 / silver	–	–	–	**34564-884**
400 / 2.5 / silver	–	–	–	**34564-885**

Accessories

Retention screw, PU 100 pieces; torque max. 0.2 Nm 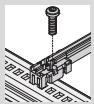	**24560-141**	**24560-141**	**24560-141**	**24560-157**
ESD clip, PU 50 pieces	**24560-255**	**24560-255**	**24560-255**	–
Board locking C, red, PU 10 pieces	**24560-377**	**24560-377**	**24560-377**	–
Board handle C, red, PU 10 pieces	**24560-378**	**24560-378**	**24560-378**	–
Identification strips for board handle, red, PU 1 sheet = 438 pieces	**60817-228**	**60817-228**	**60817-228**	–

1) SPQ (standard pack quantity): Part number includes 1 piece, but delivery is exclusively made in standard pack quantity (SPQ); please order at least the SPQ quantity or a multiple

2) Part no. includes one packing unit (PU); delivery is exclusively made in PU

Description of accessories see from page 6.47

Subracks – EuropacPRO

GUIDE RAILS FOR COMPACTPCI, VME64X WITH CODING, 4.4" PCBS, GROOVE WIDTH 2 MM AND 2.5 MM

ORDER INFORMATION

	Type **with Coding**, for CompactPCI, VME64x application. In accordance with IEEE 1101.10 and IEC 60297-3-103		Type **with Coding**, 0.1" OFFSET for power supply units. Iin accordance with IEEE 1101.10 and IEC 60297-3-103		Type. **4.4**" PCBs	
Assembly - can be clipped into Al extruded horizontal rails - can be clipped into1.5 mm thick plates **Storage temperature** from -40 °C ... 130 °C **Colors of Plastic Material** red: RAL 3000 grey: RAL 7016 green: RAL 6024	 124624426 One-piece for groove width 2 mm, PC, UL 94 V-0; multi-piece at groove width 2,5 mm, end-piece PC, UL 94 V-0, center piece Al profile	PC, UL 94 V-0	 124675998 PC, UL 94 V-0, for installation of power supplies in CompactPCI systems or plug-in units with SMD placement		 06104009 One-piece, PBT, UL 94 V-0; for 4.4" PCBs or drive unit modules	
Board length mm	Groove width mm	Colour mm	PU 10 pieces	1 piece (SPQ 50)[1]	PU 10 pieces	1 piece (SPQ 50)[1]	PU 10 pieces	1 piece (SPQ 50)[1]
70	2	red	**24568-357**	**64568-085**	–	–	–	–
70	2	grey	**24568-360**	**64568-086**	–	–	–	–
160	2	red	**24568-356**	**64568-089**	–	–	**24560-361**	**64560-143**
160	2	grey	**24568-358**	**64568-090**	–	–	–	–
160	2	green		–	**24568-359**	**64568-071**	–	–
220	2	red	–	**64568-091**	–	–	**24560-362**	**64560-144**
220	2	grey	–	**64568-092**	–	–	–	–
220	2	green	–	–	–	**64568-072**	–	–
160	2.5	red	–	**64568-109**	–	–	–	**64560-145**
160	2.5	grey	–	**64568-110**	–	–	–	–
220	2.5	red	–	**64568-111**	–	–	–	**64560-146**
220	2.5	grey	–	**64568-112**	–	–	–	–
280	2.5	red / silver	**24568-331**	–	–	–	–	–
280	2.5	grey / silver	**24568-341**	–	–	–	–	–
340	2.5	red / silver	**24568-332**	–	–	–	–	–
340	2.5	grey / silver	**24568-342**	–	–	–	–	–

Accessories

ESD clip, PU 50 pieces	**24560-255**	**24560-255**	–	–	–	–
ESD clips, for alignment pin, PU 50 pieces	**24560-256**	**24560-256**	**24560-256**	**24560-256**	–	–
Retention screw, PU 100 pieces; torque max. 0.2 Nm	**24560-141**	**24560-141**	**24560-141**	**24560-141**	**24560-158**	**24560-158**
Coding peg, PU 100 pieces	**20817-501**	**20817-501**	**20817-501**	**20817-501**	–	–

1) SPQ (standard pack quantity): Part number includes 1 piece, but delivery is exclusively made in standard pack quantity (SPQ); please order at least the SPQ quantity or a multiple

2) Part no. includes one packing unit (PU); delivery is exclusively made in PU

Description of accessories see from page 6.47

Subracks – EuropacPRO

GUIDE RAILS FOR COMPACTPCI, VME64X WITH CODING, PREASSEMBLED ESD CLIPS, GROOVE WIDTH 2 MM

ORDER INFORMATION

Type **with Coding**, forCompactPCI, VME64x application. In accordance with IEEE 1101.10 and IEC 60297-3-103

ESD CLIPS preassembled

Assembly
- can be clipped into Al extruded horizontal rails
- can be clipped into1.5 mm thick plates

Storage temperature
from -40 °C ... 130 °C

Colors of Plastic Material
red: RAL 3000
grey: RAL 7016

Remark:
At least one guide rail with ESD clips is required per slot, to avoid electrostatic discharges

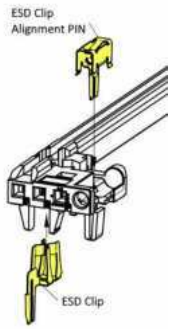

red colour: One-piece for groove width 2 mm, PC, UL 94 V-0; ESD Clip and ESD Clip for Alignment PIN preassembled

Picture shows 160mm long guide rail, mounting position bottom
24568-847 rendered

grey colour: One-piece for groove width 2 mm, PC, UL 94 V-0; ESD Clip and ESD Clip for Alignment PIN preassembled

Picture shows 160mm long guide rail, mounting position bottom
24568-848 rendered

Board length mm	Groove width mm	Colour mm	Mounting Position	PU 10 pieces	PU 10 pieces
70	2	red	bottom	**24568-855**	
70	2	red	top	**24568-853**	
160	2	red	bottom	**24568-847**	
160	2	red	top	**24568-850**	
70	2	grey	bottom		**24568-856**
70	2	grey	top		**24568-854**
160	2	grey	bottom		**24568-848**
160	2	grey	top		**24568-851**

Accessories

Retention screw, PU 100 pieces; torque max. 0.2 Nm	**24560-141**	**24560-141**	
Coding peg, PU 100 pieces	**20817-501**	**20817-501**	

2) Part no. includes one packing unit (PU); delivery is exclusively made in PU

Description of accessories see from page 6.47

Subracks – EuropacPRO

GUIDE RAILS, MULTI-PIECE, GROOVE WIDTH 2 MM

ORDER INFORMATION

			standard type		Accessories type		For 4.4" PCBs	
PCBs: Fixed lengths for 160, 220, 280, 340 mm; length 1000 mm for special dimensions **Mounting:** pluggable into horizontal rails **Storage temperature** : End piece -40°C ... +130°C PVC profile 0°C ... +60°C			 06106004 end piece, PC, UL 94 V-0,middle sectionAl extrusion	end piece, PBT, UL 94 V-0, middle section plastic extrusion (PVC, RAL 7035)	 06106005 end piece, PC, UL 94 V-0,middle sectionAl extrusion	end piece, PBT, UL 94 V-0, middle section plastic extrusion (PVC, RAL 7035)	 06106006 end piece, PC, UL 94 V-0,middle sectionAl extrusion	end piece, PBT, UL 94 V-0, middle section plastic extrusion (PVC, RAL 7035)
Description	Length mm	Groove width mm	1 piece (SPQ 10)[1]	1 piece (SPQ 10)[1]	1 piece (SPQ 10)[1]	1 piece (SPQ 10)[1]	1 piece (SPQ 10)[1]	1 piece (SPQ 10)[1]
End piece, red, 1 pair		2	**64568-004**	**64568-004**	**64568-008**	**64568-008**	**64560-057**	**64560-057**
Al extrusion, for 160mm board length	95	2	**34560-891**	**34564-891**	**34560-891**	**34564-891**	**34560-891**	**34564-891**
Al extrusion, for 220 mm board length	155	2	**34560-892**	**34564-892**	**34560-892**	**34564-892**	**34560-892**	**34564-892**
Al extrusion, for 280 mm board length	215	2	**34560-893**	**34564-893**	**34560-893**	**34564-893**	**34560-893**	**34564-893**
Al extrusion, for 340 mm board length	275	2	**34560-894**	–	**34560-894**	–	**34560-894**	–
Al extrusion,for any board length	1000	2	**34560-900**	**34564-900**	**34560-900**	**34564-900**	**34560-900**	**34564-900**
Description	Length mm	Groove width mm	1 piece (SPQ 10)[1]	1 piece (SPQ 10)[1]	1 piece (SPQ 10)[1]	1 piece (SPQ 10)[1]		
End piece, red, 1 pair		2.5	**64568-014**		**64568-018**			
Al extrusion, for 160 mm board length	95	2.5	**34562-813**	–	**34562-813**	–		
Al extrusion, for 220 mm board length	155	2.5	**34562-814**	–	**34562-814**	–		
Al extrusion, for 280 mm board length	215	2.5	**34562-815**	–	**34562-815**	–		
Al extrusion, for 340 mm board length	275	2.5	**34562-816**	–	**34562-816**	–		
Al extrusion,for any board length	1000	2.5	**34562-822**	–	**34562-822**	–		

Accessories

ESD clip, PU 50 pieces	**24560-255**	**24560-255**	**24560-255**	**24560-255**	–	–
Retention screw, PU 100 pieces; torque max. 0.2 Nm	**24560-141**	**24560-141**	**24560-141**	**24560-141**	**24560-158**	**24560-158**
Board locking C, red, PU 10 pieces	–	–	**24560-377**	**24560-377**	–	–
Board handle C, red, PU 10 pieces	–	–	**24560-378**	**24560-378**	–	–
Identification strips for board handle, red, PU 1 sheet = 438 pieces	–	–	**60817-228**	**60817-228**	–	–
Coding see page	–	–	see page 6.47		–	–

1) SPQ (standard pack quantity): Part number includes 1 piece, but delivery is exclusively made in standard pack quantity (SPQ); please order at least the SPQ quantity or a multiple

2) Part no. includes one packing unit (PU); delivery is exclusively made in PU

Description of accessories see from page 6.47

Subracks – EuropacPRO

GUIDE RAILS, MULTI-PIECE, GROOVE WIDTH 2 AND 2.5MM

ORDER INFORMATION

			Coding (IEEE) type					
			red		grey		green, 0,1" Offset	
PCBs: Fixed lengths for 160, 220, 280, 340 mm; length 1000 mm for special dimensions **Mounting:** pluggable into horizontal rails **Storage temperature** : End piece -40°C ...+130°C PVC profile 0°C ... +60°C red = similar RAL 3000, grey = similar RAL 7016, green = similar RAL 6024			 135313686		 135313698		 135313710	
			end piece, PC, UL 94 V-0,middle sectionAl extrusion	end piece, PBT, UL 94 V-0, middle section plastic extrusion (PVC, RAL 7035)	end piece, PC, UL 94 V-0,middle sectionAl extrusion	end piece, PBT, UL 94 V-0, middle section plastic extrusion (PVC, RAL 7035)	end piece, PC, UL 94 V-0,middle sectionAl extrusion	end piece, PBT, UL 94 V-0, middle section plastic extrusion (PVC, RAL 7035)
	mm	Groove width mm	1 piece (SPQ 10)[1]	1 piece (SPQ 10)[1]	1 piece (SPQ 10)[1]	1 piece (SPQ 10)[1]	1 piece (SPQ 10)[1]	1 piece (SPQ 10)[1]
End piece, 1 pair		2	**64568-093**	**64568-093**	**64568-094**	**64568-094**	**64568-095**	**64568-095**
Al extrusion, for 160 mm board length	95	2	**34560-891**	**34564-891**	**34560-891**	**34564-891**	**34560-891**	**34564-891**
Al extrusion, for 220 mm board length	155	2	**34560-892**	**34564-892**	**34560-892**	**34564-892**	**34560-892**	**34564-892**
Al extrusion, for 280 mm board length	215	2	**34560-893**	**34564-893**	**34560-893**	**34564-893**	**34560-893**	**34564-893**
Al extrusion, for 340 mm board length	275	2	**34560-894**	–	**34560-894**	–	**34560-894**	–
Al extrusion,for any board length	1000	2	**34560-900**	**34564-900**	**34560-900**	**34564-900**	**34560-900**	**34564-900**
Description	Length mm	Groove width mm	1 piece (SPQ 10)[1]	1 piece (SPQ 10)[1]	1 piece (SPQ 10)[1]	1 piece (SPQ 10)[1]	1 piece (SPQ 10)[1]	1 piece (SPQ 10)[1]
End piece, 1 pair		2.5	**64568-093**		**64568-094**		**64568-095**	
Al extrusion, for 160 mm board length	95	2.5	**34562-813**	–	**34562-813**	–	**34562-813**	–
Al extrusion, for 220 mm board length	155	2.5	**34562-814**	–	**34562-814**	–	**34562-814**	–
Al extrusion, for 280 mm board length	215	2.5	**34562-815**	–	**34562-815**	–	**34562-815**	–
Al extrusion, for 340 mm board length	275	2.5	**34562-816**	–	**34562-816**	–	**34562-816**	–
Al extrusion,for any board length	1000	2.5	**34562-822**	–	**34562-822**	–	**34562-822**	–

Accessories

ESD clip, PU 50 pieces	**24560-255**	**24560-255**	**24560-255**	**24560-255**	**24560-255**	**24560-255**
ESD clips, for alignment pin, PU 50 pieces	**24560-256**	**24560-256**	**24560-256**	**24560-256**	**24560-256**	**24560-256**
Retention screw, PU 100 pieces; torque max. 0.2 Nm	**24560-141**	**24560-141**	**24560-141**	**24560-141**	**24560-141**	**24560-141**
Coding peg	**20817-501**	**20817-501**	**20817-501**	**20817-501**	**20817-501**	**20817-501**

1) SPQ (standard pack quantity): Part number includes 1 piece, but delivery is exclusively made in standard pack quantity (SPQ) please order at least the SPQ quantity or a multiple

2) Part no. includes one packing unit (PU); delivery is exclusively made in PU

NOTE

- (*) only for groove width 2.0mm
- Headpieces with coding can be used for be used for groove width 2.0mm as well as for 2.5mm

Part number in bold face type: ready for despatch within 2 working days
Part number in normal type: ready for despatch within 10 working days

DIMENSION DRAWINGS OF GUIDE RAILS

Standard

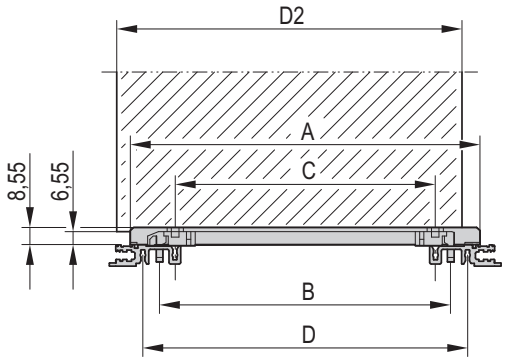

bza45808

Robust version

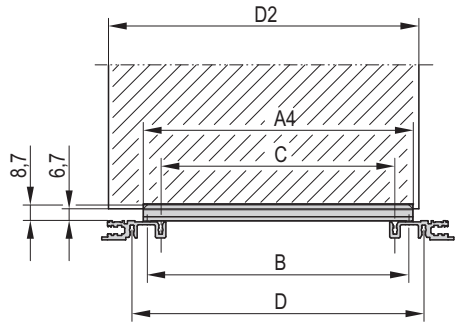

06105074

For accessories

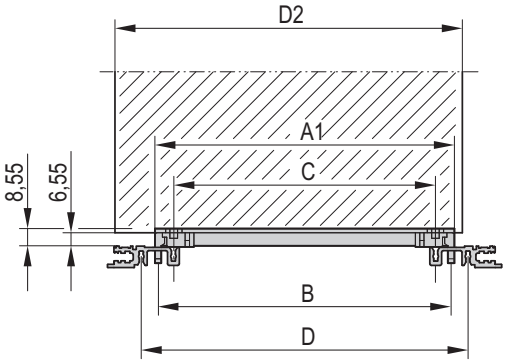

bza45808

For accessories, strengthened

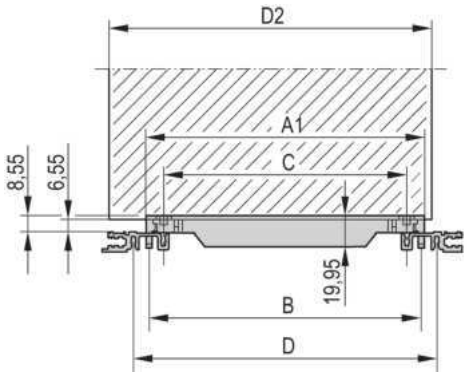

CompactPCI, VME64x

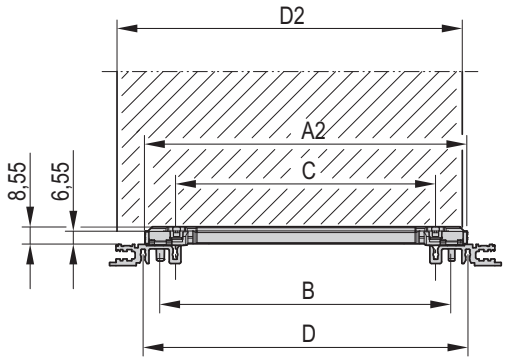

06105068

4.4" (111.7 mm)

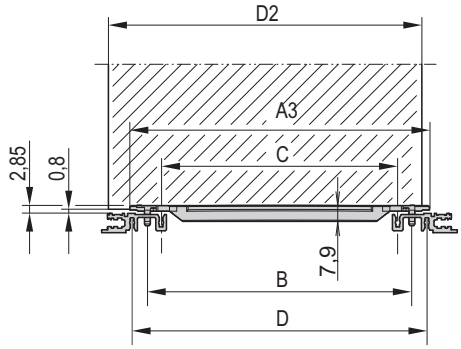

06105069

Dimensions table

Board length					Dimensions			
L	A	A1	A2	A3	A4	B	C	D
mm	mm	mm	mm	mm	mm	mm	mm	mm
70	71.5	47.9	59.39	63	49	45	30	60
100	101.5	77.9	89.39	93	79	75	60	90
160	161.5	137.9	149.39	153	139	135	120	150
220	221.5	197.9	209.39	213	199	195	180	210
280	281.5	257.9	269.39	273	259	255	240	270
340	341.5	317.9	322.39	333	319	315	300	330
400	401.5	377.9	389.39	393	379	375	360	390

A, A1, A2, A3, A4: Length of rail
B: Pitch of snap-in fixing
C: Pitch of guide rail retention screws
D: Pitch of horizontal rail retention screws

Table dimensions for guide rails

Subracks – EuropacPRO

GUIDE RAIL ACCESSORIES

ORDER INFORMATION

		ESD clips, CompactPCI/VME 64	Coding for subracks	
			Keying/coding block for guide rails accessory type red, RAL 3000, grey, RAL 7016	Keying/coding for CompactPCI, VME64x handles to IEEE 1011.10 and IEC 60297-3-103
		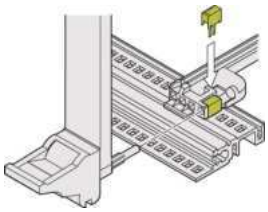 108230497 Spring steel, tin-plated, ESD clip, for alignment pin in accordance with IEEE; can be plugged into the guide rails with coding and into the keying/coding block; provides conductive contact between the alignment pin of the insertion/extractor handle (IEL or IET handle) and the horizontal rail	 121894752 136815562 PC, UL 94 V-0, keying/coding block is clipped into the horizontal rail next to the guide rail; please order keying/coding pegs separately	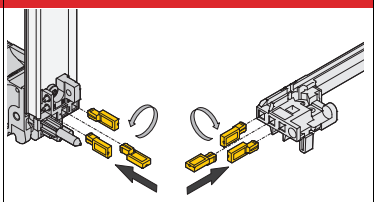 135276437 Keying/coding peg, PC, UL 94 V-0, RAL 7035The keying/coding pegs prevent plug-in units to be mounted in wrong slots. They are inserted in the chambers of the codable card guides as well as in the insertion/extractor handles IEL or IET (4 possible positions), resulting in 64 codings per card guide; when coding the upper and lower card guide, 4096 codings will result;
Assembly	Colour	PU 50 pieces	1 piece (SPQ 50) red, RAL 3000, grey, RAL 7016	PU 100 pieces
above	red	–	**64568-232**	–
	grey	–	**64568-233**	**20817-501**
	silver	**24560-256**	–	–
below	red	–	**64568-234**	–
	grey	–	**64568-235**	**20817-501**
	silver	**24560-256**	–	–

1) SPQ (standard pack quantity): Part number includes 1 piece, but delivery is exclusively made in standard pack quantity (SPQ); please order at least the SPQ quantity or a multiple

2) Part no. includes one packing unit (PU); delivery is exclusively made in PU

GUIDE RAIL ACCESSORIES

ORDER INFORMATION

	ESD clips for guide rails	Board locking C for PCBs without front panel; for accessory type guide rails	PCB handle C for board locking; for accessory type guide rails	Identification strips
	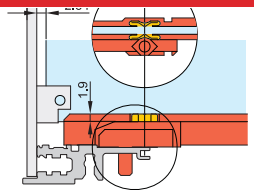 04503050 Spring steel, tin-plated, provides conductive contact between board and horizontal rail, on both the solder side and the component side	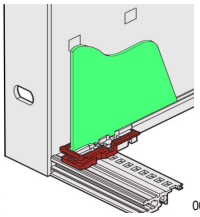 00048868_0 PBT, UL 94 V-0, red, to fix the PCB in the subrack (also slot 1), can also be used without board handle, minimum distance 3 HP	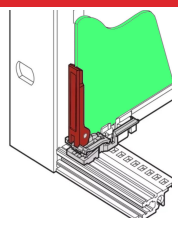 00013621_0 PBT, UL 94 V-0, red, insertion/extraction function with connection to board locking (also slot 1), mounting directly behind front panel (above and below), minimum distance 3 HP	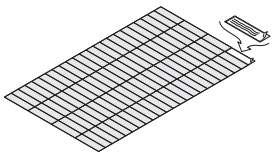 06108076 Polyester film, 31 x 4 mm, self-adhesive, white/matt (1 A4 sheet contains 438 pieces)
Assembly Colour mm	silver PU 50 pieces	red PU 10 pieces	red PU 10 pieces	white/matt 1 piece
above/below	**24560-255**	**24560-377**	**24560-378**	**60817-228**

Part number in bold face type: ready for despatch within 2 working days
Part number in normal type: ready for despatch within 10 working days

SHIELDING FOR TOP AND BOTTOM

Cover plates can be used for electromagnetic shielding (with EMC contact springs) or as mechanical protection (without EMC springs)

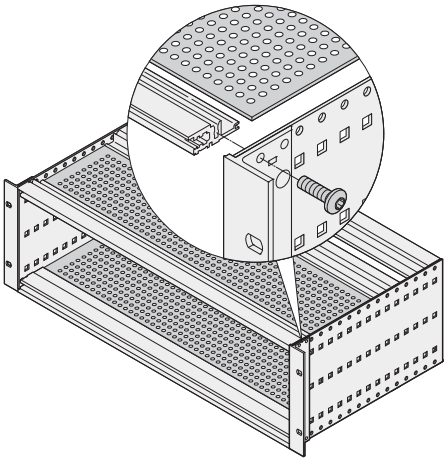

06108077

Cover plates for mechanical protection

- Cover plates are inserted into the grooves of the front and rear horizontal rails, type L "light"

see page 6.50

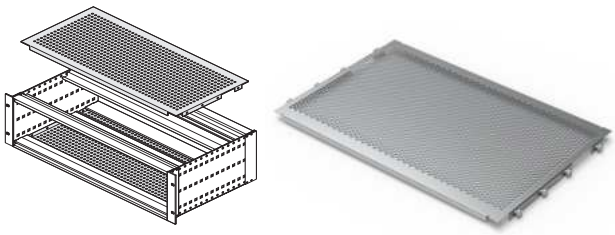

06102084

Cover plates with EMC shielding and mechanical protection

EMC cover plates for top and bottom

- Inserted in the groove of the front and rear horizontal rails; shielding with contact springs, lateral contact by bolting the bracket to the side panel
- Used when standard-depth PCBs (160, 220, 280, ...) are fitted
-

see page 6.51

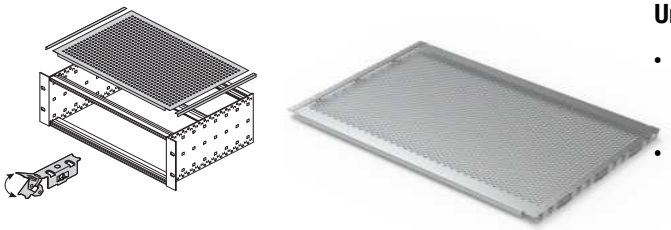

06105082

Universal EMC cover plates for top and bottom

- Inserted in the groove of the front and rear horizontal rails; shielding with contact springs, lateral contact by bolting to the side panel with special contact springs
- Used when PCBs with special dimensions are fitted

see page 6.52

Advanced EMC Plus top & bottom covers.
Dual Mesh design for maximum EMC shielding without restricting the air flow

- Inserted in the groove of the front and rear horizontal rails; shielding with contact springs, lateral contact by bolting the bracket to the side panel
- The addtional mesh above the card cage further increase the EMC shielding
- Used when standard-depth PCBs (160, 220, 280, ...) are fitted

see page 6.53

NEW

Advanced EMC top & bottom covers, improving EMC shielding without restricting the air flow

- Inserted in the groove of the front and rear horizontal rails; shielding with contact springs, lateral contact by bolting the bracket to the side panel
- Used when standard-depth PCBs (160, 220, 280, ...) are fitted

see page 6.54

NEW

Advanced EMC shielding through side panel covers

- Assembled on the standard side panel to increase material thickness and covering cut-outs, to imrove the lateral RF-shielding effectiveness of the subrack

see page 6.55

NEW

COVER PLATES FOR MECHANICAL PROTECTION (INSERTION INTO HORIZONTAL RAIL TYPE L)

ORDER INFORMATION

			Cover plates for insertion into horizontal rail type L
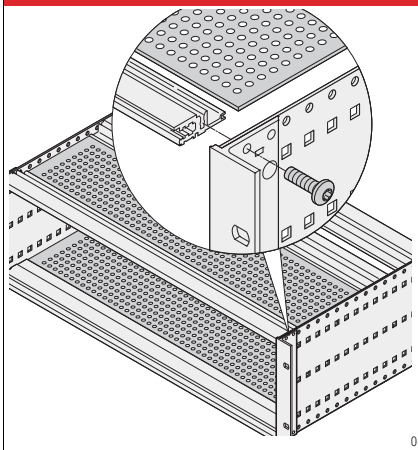 06197010			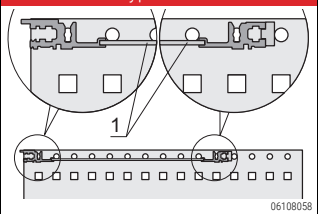 06108058 Perforated Al plate, 1.2 mm, hole diameter 3.8 mm, Al, untreated, perforation degree 60 %; for insertion into the groove of the light horizontal rails (type L)
Width HP	Depth mm	Application	PU 1 pair
42	175	160 mm board depth	**24561-031**
63	175	160 mm board depth	**24561-041**
84	175	160 mm board depth	**24561-051**
84	235	220 mm board depth	**24561-052**

NOTE

- Other dimensions on request

Subracks – EuropacPRO

EMC COVER PLATES AND MECHANICAL PROTECTION

- Cover plate for bolting to side panel
- Used when standard-depth PCBs (160, 220, 280, ...) are fitted

ORDER INFORMATION

			Cover plate for bolting to side panel	Stainless steel EMC gasket, between cover plate and horizontal rail	
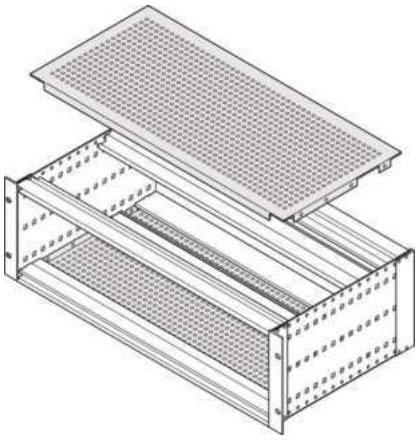 06102084			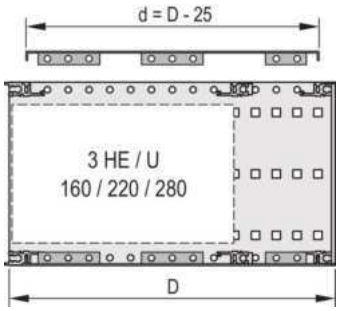 Al, 1.0 mm, hole diameter 4.0 mm, passivated, perforation degree 58 %, incl. fixing screws; for shielding 4 stainless steel EMC gaskets are required per subrack 06102082	stainless steel EMC gasket, clips into the horizontal rail and forms the contact with the cover plate; suitable for all horizontal rails 06106052	
Width HP	Depth mm	Application	PU 1 pair	PU 10 pieces	PU 100 pieces
42	175	160 mm board depth	**24560-064**	**24560-241**	–
42	235	160, 220 mm board depth	**24560-065**		
42	275	160, 220 mm board depth CompactPCI (275 mm)	**24560-061**		
42	277.75	160, 220 mm board depth VME64x (277.75 mm)	**24579-090**		
42	295	160, 220, 280 mm board depth	**24560-066**		
63	175	160 mm board depth	**24560-071**	**24560-243**	–
63	235	160, 220 mm board depth	**24560-072**		
63	275	160, 220 mm board depth CompactPCI (275 mm)	**24560-062**		
63	295	160, 220, 280 mm board depth	**24560-073**		
84	175	160 mm board depth	**24560-078**	**24560-245**	**24560-246**
84	235	160, 220 mm board depth	**24560-079**		
84	275	160, 220 mm board depth CompactPCI (275 mm)	**24560-063**		
84	277.75	160, 220 mm board depth VME64x (277.75 mm)	**24579-092**		
84	295	160, 220, 280 mm board depth	**24560-080**		
84	355	160, 220, 280 mm board depth	**24560-081**		
84	415	160, 220, 280 mm board depth	**24560-082**		
84	475	160, 220, 280 mm board depth	**24560-083**		
Cover Plate Fixing Kit Cover plate latch, additional securing for cover plate, PU 4 pieces. Can be combined with horizontal rail type H and R			24566-007		
Assembly tool, for EMC gasket, stainless steel (horizontal rails), 1 piece 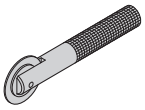			–	**24560-271**	

NOTE

- Cover plates without perforation available on request

Part number in bold face type: ready for despatch within 2 working days
Part number in normal type: ready for despatch within 10 working days

UNIVERSAL EMC COVER PLATES AND MECHANICAL PROTECTION

- Used when PCBs with special dimensions are fitted

ORDER INFORMATION

			Universal cover plate	Stainless steel EMC gasket, between cover plate and horizontal rail	
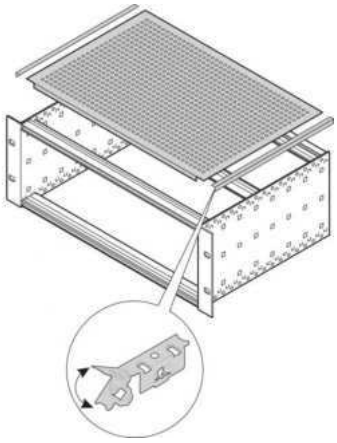 06105082			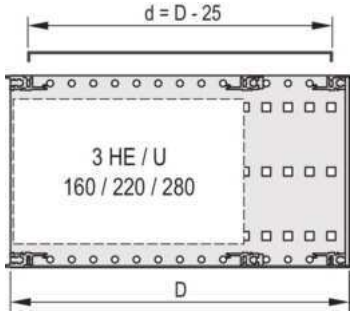 06108079 Al, 1.0 mm, hole diameter 4.0 mm,passivated, perforation degree 58 %, **incl. lateral EMC sealing,** incl. fixing screws. Torque moment for fastening screws = 0.9 Nm	06106052 Stainless steel EMC gasket, clips into the horizontal rail and forms the contact with the cover plate; suitable for all types of horizontal rails	
Width HP	Depth mm	Application	1 pair	PU 10 pieces	PU 100 pieces
42	175	160 mm board depth	**24560-031**	**24560-241**	–
42	235	160, 220 mm board depth	**24560-032**		
42	295	160, 220, 280 mm board depth	**24560-033**		
63	175	160 mm board depth	**24560-041**	**24560-243**	–
63	235	160, 220 mm board depth	**24560-042**		
63	295	160, 220, 280 mm board depth	**24560-043**		
84	175	160 mm board depth	**24560-051**	**24560-245**	**24560-246**
84	235	160, 220 mm board depth	**24560-052**		
84	295	160, 220, 280 mm board depth	**24560-053**		
84	355	160, 220, 280 mm board depth	**24560-054**		
84	415	160, 220, 280 mm board depth	**24560-055**		
84	475	160, 220, 280 mm board depth	**24560-056**		
Cover Plate Fixing Kit Cover plate latch, additional securing for cover plate, PU 4 pieces. Can be combined with horizontal rail type H and R 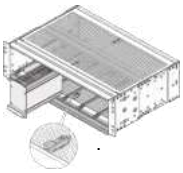			24566-007		
Assembly tool, for EMC gasket, stainless steel (horizontal rails), 1 piece 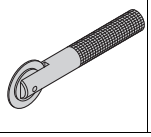			–	**24560-271**	

Subracks – EuropacPRO

ADVANCED EMC SHIELDING FOR TOP AND BOTTOM COVERS AND SIDE PANELS

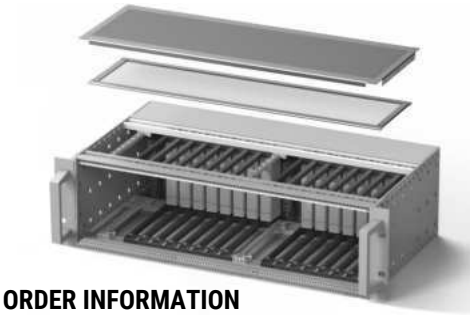

NEW

Advanced EMC Plus top & bottom covers.

Dual mesh design **for maximum EMC shielding without resticting the air flow**

- Inserted in the groove of the front and rear horizontal rails; shielding with contact springs, lateral contact by bolting the bracket to the side panel
- The additional mesh above the card cage further increase the EMC shielding
- Used when standard-depth PCBs (160, 220, 280, ...) are fitted

ORDER INFORMATION

	Cover plate, additional mesh, perforation Ø2.3mm, for bolting to side panel	Stainless steel EMC gasket, between cover plate and horizontal rail	
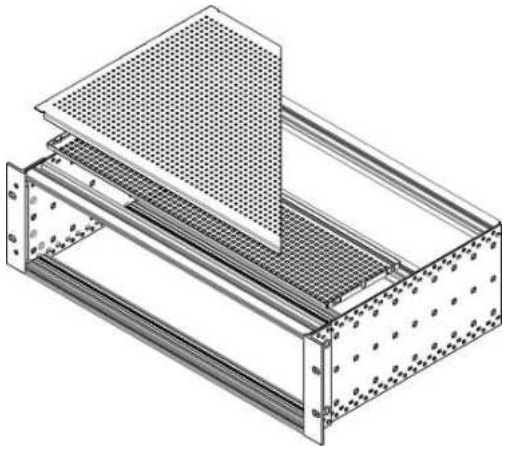	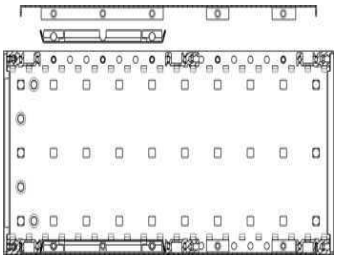 Al, 1.0 mm, hole diameter 2.3 mm, passivated, perforation degree 50 %, incl. fixing screws; for shielding 4 stainless steel EMC gaskets are required per subrack	06106052 stainless steel EMC gasket, clips into the horizontal rail and forms the contact with the cover plate; suitable for all horizontal rails	
Width HP / Depth mm / Application	PU 1 pair	PU 10 pieces	PU 100 pieces
84 175 160 mm, PCB Board Depth	**24563-770**	**24560-245**	**24560-246**
84 235 160 mm, PCB Board Depth	**24563-771**		
84 275 160 mm, PCB Board Depth CompactPCI (275 mm)	**24563-772**		
84 277.75 160 mm, PCB Board Depth VME64x (277.75 mm)	**24563-773**		
84 295 160 mm, PCB Board Depth	**24563-774**		
84 355 160 mm, PCB Board Depth	**24563-775**		
84 415 160 mm, PCB Board Depth	**24563-776**		
84 475 160 mm, PCB Board Depth	**24563-777**		
84 235 220 mm, PCB Board Depth	**24563-780**		
84 295 220 mm, PCB Board Depth	**24563-781**		
84 355 220 mm, PCB Board Depth	**24563-782**		
84 415 220 mm, PCB Board Depth	**24563-783**		
84 475 220, mm, PCB Board Depth	**24563-784**		
84 295 280 mm, PCB Board Depth	**24563-790**		
84 355 280 mm, PCB Board Depth	**24563-791**		
84 415 280 mm, PCB Board Depth	**24563-792**		
84 475 280 mm, PCB Board Depth	**24563-793**		
Assembly tool, for EMC gasket, stainless steel (horizontal rails), 1 piece 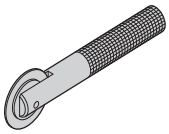	–	**24560-271**	

NOTE

- Cover plates in 42 and 63HP on request
- Cover plates without perforation available on request
- Cover plates can not be combined with horizontal rails type R

Part number in bold face type: ready for despatch within 2 working days
Part number in normal type: ready for despatch within 10 working days

Subracks – EuropacPRO

ADVANCED EMC SHIELDING FOR TOP AND BOTTOM COVERS

Advanced EMC top & bottom covers, improving EMC shielding without restricting the air flow

- Covers with EMC and airflow optimized perforation with diameter Ø 2.3mm and perforation degree of 50 %
- Cover plate for bolting to side
- For standard PCBs depths (160, 220, 280, ...)

NEW

ORDER INFORMATION

	Cover plate, perforation Ø 2.3mm, for bolting to side panel	Stainless steel EMC gasket, between cover plate and horizontal rail
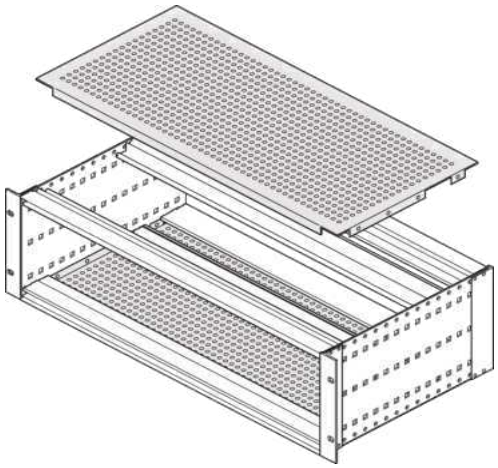 06102084	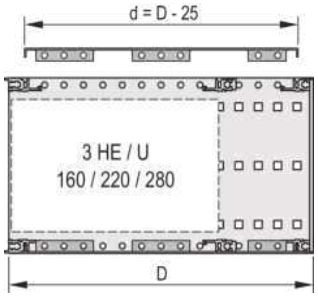 06102082 Al, 1.0 mm, hole diameter 2.3 mm, passivated, perforation degree 50 %, incl. fixing screws; for shielding 4 stainless steel EMC gaskets are required per subrack	06106052 stainless steel EMC gasket, clips into the horizontal rail and forms the contact with the cover plate; suitable for all horizontal rails

Width HP	Depth mm	Application	PU 1 pair	PU 10 pieces	PU 100 pieces
36	175	160 mm board depth	**24563-555**	**24560-247**	–
36	235	160, 220 mm board depth	**24563-556**		
42	175	160 mm board depth	**24563-560**	**24560-241**	–
42	235	160, 220 mm board depth	**24563-561**		
42	275	160, 220 mm board depth CompactPCI (275 mm)	**24563-562**		
42	277.75	160, 220 mm board depth VME64x (277.75 mm)	**24563-563**		
42	295	160, 220, 280 mm board depth	**24563-564**		
63	175	160 mm board depth	**24563-660**	**24560-243**	–
63	235	160, 220 mm board depth	**24563-661**		
63	275	160, 220 mm board depth CompactPCI (275 mm)	**24563-662**		
63	295	160, 220, 280 mm board depth	**24563-663**		
84	175	160 mm board depth	**24563-760**	**24560-245**	**24560-246**
84	235	160, 220 mm board depth	**24563-761**		
84	275	160, 220 mm board depth CompactPCI (275 mm)	**24563-762**		
84	277.75	160, 220 mm board depth VME64x (277.75 mm)	**24563-763**		
84	295	160, 220, 280 mm board depth	**24563-764**		
84	355	160, 220, 280 mm board depth	**24563-765**		
84	415	160, 220, 280 mm board depth	**24563-766**		
84	475	160, 220, 280 mm board depth	**24563-767**		
Assembly tool, for EMC gasket, stainless steel (horizontal rails), 1 piece 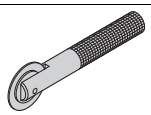			–	**24560-271**	

NOTE

- Cover plates without perforation available on request
- Cover plates can not be combined with horizontal rails type R

Subracks – EuropacPRO

ADVANCED EMC SHIELDING FOR SIDE PANELS

NEW

- Side panel covers for increased lateral RF shielding
- Assembled on the outside of the standard side panel of the subrack.
- Overall width is still in accordance to IEC 60297-3-100 and IEEE 1101.1
- Assembly material included

ORDER INFORMATION STANDARD

EMC side panel cover,
(1 kit à 2 pcs, incl. assembly material)

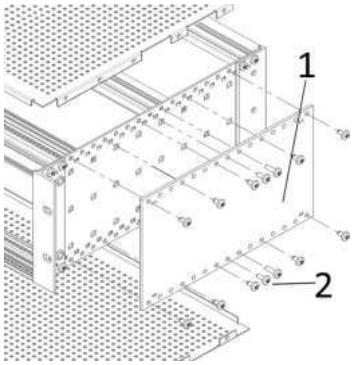

Height U	Depth mm	EMC side cover panels (1) , Al, 3 mm, passivated plus assembly kit (2) 1 kit (2pcs)
3	175	**24563-255**
3	235	**24563-256**
3	275	**24563-257**
3	277.75	**24563-258**
3	295	**24563-259**
3	355	**24563-260**
3	415	**24563-261**
3	475	**24563-262**
4	175	**24563-265**
4	235	**24563-266**
4	295	**24563-267**
4	355	**24563-268**
4	415	**24563-269**
4	475	**24563-270**
6	175	**24563-275**
6	235	**24563-276**
6	275	**24563-277**
6	277.75	**24563-278**
6	295	**24563-279**
6	355	**24563-280**
6	415	**24563-281**
6	475	**24563-282**

ORDER INFORMATION FOR TELESCOPIC SLIDES

EMC side pnale cover with groove for telescopic slides C-profile
page 6.71
(1 kit à 2 pcs, incl. assembly material)

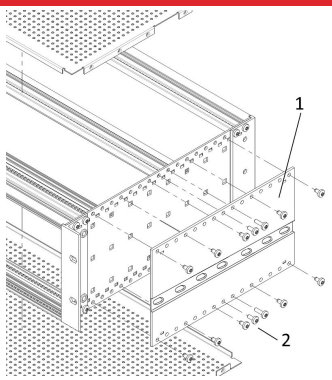

Height U	Depth mm	EMC side cover panels (1) , Al, 3 mm, passivated plus assembly kit (2) 1 kit (2pcs)
3	175	**24563-355**
3	235	**24563-356**
3	275	-
3	277.75	-
3	295	**24563-359**
3	355	**24563-360**
3	415	**24563-361**
3	475	**24563-362**
4	175	-
4	235	-
4	295	-
4	355	-
4	415	-
4	475	-
6	175	**24563-375**
6	235	**24563-376**
6	275	-
6	277.75	-
6	295	**24563-379**
6	355	**24563-380**
6	415	**24563-381**
6	475	**24563-382**

Remark
Telescopic slides C-profile page 6.71

Part number in bold face type: ready for despatch within 2 working days
Part number in normal type: ready for despatch within 10 working days

COVER/SHIELDING TO FRONT AND REAR

- The front and rear sides of the subrack can be shielded by a hinged front panel or by a fixed front panel and 19" brackets
- The rear can be shielded with a front panel and a corner profile

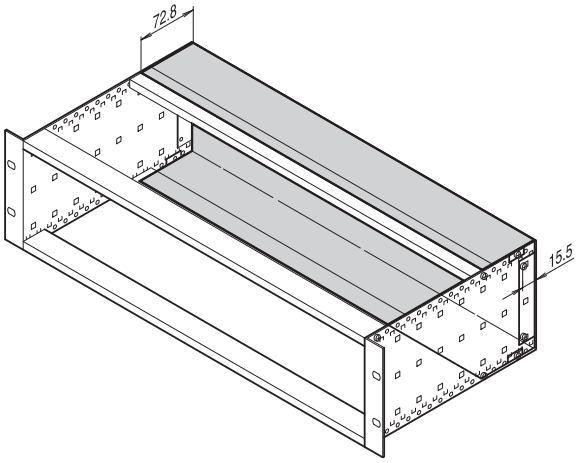

BZA45814

Rear hood

see page 6.57

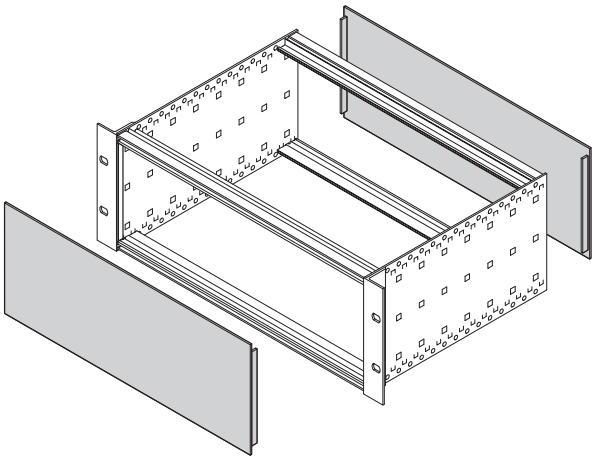

06112089

Front panel for front and rear

see page 6.58 to 6.60

Front panel, hinged/pivoted

see page 6.61

135842093

135842160

135842107

Subracks – EuropacPRO

REAR HOOD FOR 3 U AND 6 U SUBRACKS (FOR STAINLESS STEEL EMC GASKET)

ORDER INFORMATION

		Rear hood	Stainless steel EMC gasket, between cover plate and horizontal rail	
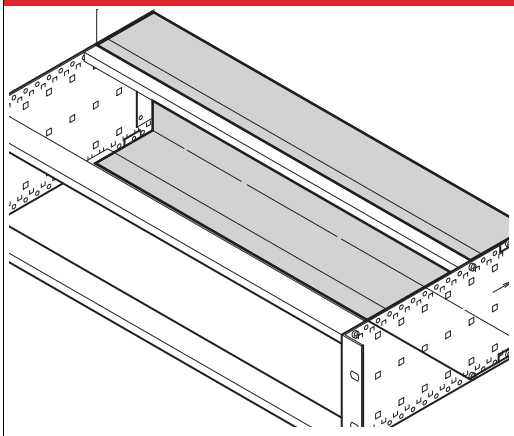 bza45814		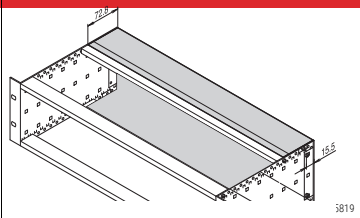 Al, 1 mm, clear passivated; 60 mm additional side panel depth required (board depth + 60 mm); for shielding please order EMC gasket for horizontal rail separately; cannot be used simultaneously with rear corner profile	stainless steel EMC gasket, clips into the horizontal rail and forms the contact with the cover plate; suitable for all horizontal rails	
Height U	Width HP	1 piece	PU 10 pieces	PU 100 pieces
3	42	**34561-750**	**24560-241**	–
3	84	**34561-752**	**24560-245**	**24560-246**
6	63	**34561-763**	**24560-243**	–
6	84	**34561-764**	**24560-245**	**24560-246**
Torx panhead screw, M4 × 6, St, zinc-plated, PU 100 pieces		**24560-135**	–	
Assembly tool, for EMC gasket, stainless steel (horizontal rails), 1 piece 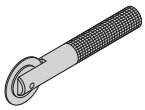		–	**24560-271**	

NOTE

- Other dimensions of rear hood available on request

Part number in bold face type: ready for despatch within 2 working days
Part number in normal type: ready for despatch within 10 working days

Subracks – EuropacPRO

FRONT/REAR PANELS, UNSHIELDED

ORDER INFORMATION

			Front panel					
			pre-anodised, cut edges plain		anodised		Front anodised, rear iridescent green chromated	
04292001			Al, 2.5 mm		Al, 2.5 mm		Al, 2.5 mm	
Height U	Height mm	Width HP	1 piece	1 piece (SPQ 5)[1]	1 piece	1 piece (SPQ 5)[1]	1 piece	1 piece (SPQ 5)[1]
1	44.45	28	–	–	–	–	**20850-423**	–
1	44.45	42	–	–	–	–	**20850-424**	–
1	44.45	63	–	–	–	–	**20850-425**	–
1	44.45	84	–	–	–	–	**20850-426**	–
2	84.0	84	**30818-271**	–	**30807-416**	–	**30847-461**	–
3	128.4	2	–	**30810-433**	–	**30810-432**	–	**30847-470**
3	128.4	3	–	**30818-272**	–	**30807-508**	–	**30847-471**
3	128.4	4	–	**30818-273**	–	**30807-481**	–	**30838-043**
3	128.4	5	–	**30818-274**	–	**30807-510**	–	**30838-044**
3	128.4	6	–	**30818-275**	–	**30807-482**	–	**30838-045**
3	128.4	7	–	**30818-276**	–	**30807-509**	–	**30838-046**
3	128.4	8	–	**30818-277**	–	**30807-484**	–	**30838-047**
3	128.4	10	–	**30818-279**	–	**30807-483**	–	**30838-049**
3	128.4	12	–	**30818-281**	–	**30807-485**	–	**30838-051**
3	128.4	14	–	**30818-282**	–	**30807-501**	–	**30838-053**
3	128.4	21	–	**30818-289**	–	**30807-487**	–	**30838-060**
3	128.4	28	–	**30818-296**	–	**30807-496**	–	**30838-067**
3	128.4	42	**30818-310**	–	**30807-494**	–	**30838-081**	–
3	128.4	63	**30818-331**	–	**30808-067**	–	**30838-102**	–
3	128.4	84	**30818-352**	–	**30807-506**	–	**30838-123**	–
4	172.9	42	–	–	–	–	**30847-463**	–
4	172.9	63	–	–	–	–	**30847-464**	–
4	172.9	84	**30818-434**	–	**30807-596**	–	**30847-465**	–
6	261.8	2	–	**30818-747**	–	**30818-741**	–	**30847-472**
6	261.8	4	–	**30818-518**	–	–	–	**30838-124**
6	261.8	5	–	–	–	–	–	**30838-125**
6	261.8	6	–	–	–	–	–	**30838-126**
6	261.8	7	–	–	–	–	–	**30838-127**
6	261.8	8	–	**30818-522**	–	–	–	**30838-128**
6	261.8	10	–	**30818-524**	–	**30807-753**	–	**30838-130**
6	261.8	12	–	**30818-526**	–	–	–	**30838-132**
6	261.8	14	–	**30818-528**	–	**30807-758**	–	**30838-134**
6	261.8	16	–	**30818-530**	–	–	–	**30838-136**
6	261.8	21	–	**30818-535**	–	**30807-757**	–	**30838-141**
6	261.8	28	–	**30818-542**	–	**30807-766**	–	**30838-148**
6	261.8	42	**30818-556**	–	**30807-764**	–	**30838-162**	–
6	261.8	63	**30818-577**	–	**30807-771**	–	**30838-183**	–
6	261.8	84	**30818-598**	–	**30807-776**	–	**30838-204**	–
9	395.1	4	–	–	–	–	–	**30847-476**
9	395.1	8	–	–	–	–	–	**30847-480**
9	395.1	10	–	–	–	–	–	**30847-482**
9	395.1	12	–	–	–	–	–	**30847-484**
9	395.1	84	–	–	–	–	**30847-556**	–

•Front panel assembly kits, sleeves, collar screws, quick-release fasteners see page 6.73

1) SPQ (standard pack quantity): Part number includes 1 piece, but delivery is exclusively made in standard pack quantity (SPQ); please order at least the SPQ quantity or a multiple

Subracks – EuropacPRO

FRONT/REAR PANELS SHIELDABLE WITH STAINLESS STEEL EMC GASKET

ORDER INFORMATION

			Front panel			
			Front panel for shielding with EMC gasket (stainless steel)		Stainless steel EMC gasket	
04292001			Al, 2.5 mm, front anodized, rear iridescent green chromated, 2 alignment pins pressed-in, St, stainless		inserted laterally into the grooves of the front panel, suited for temperatures above 70 °C	
Height U	Height mm	Width HP	1 piece	1 piece (SPQ 5)[1]	PU 10 pieces	PU 100 pieces
2	84	84	**30846-588**	–	**21101-775**	**21101-776**
3	128.4	2	–	**30846-864**	**21101-705**	**21101-706**
3	128.4	3	–	**20846-425**		
3	128.4	4	–	**20846-426**		
3	128.4	5	–	**20846-427**		
3	128.4	6	–	**20846-428**		
3	128.4	7	–	**20846-429**		
3	128.4	8	–	**20846-430**		
3	128.4	10	–	**20846-431**		
3	128.4	12	–	**20846-432**		
3	128.4	14	–	**20846-433**		
3	128.4	21	–	**20846-434**		
3	128.4	28	–	**20846-436**		
3	128.4	42	**20846-437**	–		
3	128.4	63	**20846-438**	–		
3	128.4	84	**30846-676**	–		
4	172.9	42	**30846-681**	–	**21101-713**	**21101-714**
4	172.9	63	**30846-682**	–		
4	172.9	84	**30846-683**	–		
6	261.8	2	–	**30846-865**	**21101-707**	**21101-708**
6	261.8	4	–	**20846-443**		
6	261.8	5	–	**20846-444**		
6	261.8	6	–	**20846-445**		
6	261.8	7	–	**20846-446**		
6	261.8	8	–	**20846-447**		
6	261.8	10	–	**20846-448**		
6	261.8	12	–	**20846-449**		
6	261.8	14	–	**20846-450**		
6	261.8	16	–	**20846-456**		
6	261.8	21	–	**20846-451**		
6	261.8	28	–	**20846-452**		
6	261.8	42	**20846-453**	–		
6	261.8	63	**20846-454**	–		
6	261.8	84	**30846-771**	–		
9	395.1	84	**30846-859**	–	**21101-709**	**21101-710**
Assembly tool, for stainless steel EMC gasket					**24560-270**	

•Front panel assembly kits, sleeves, collar screws, quick-release fasteners see page 6.73

1) SPQ (standard pack quantity): Part number includes 1 piece, but delivery is exclusively made in standard pack quantity (SPQ); please order at least the SPQ quantity or a multiple

Part number in bold face type: ready for despatch within 2 working days
Part number in normal type: ready for despatch within 10 working days

FRONT/REAR PANELS SHIELDABLE WITH TEXTILE EMC GASKET

ORDER INFORMATION

			Front panel			
			Front panel for shielding with EMC sealing (textile)		Textile EMC gasket	
04292001			Al extrusion, 2.5 mm, front anodised,rear conductive; 3, 6 U with alignment pin (not 84 HP)		textile gasket, core: foam, sleeve: textile cladding with CuNi coating, UL 94 V-0	
Height U	Height mm	Width HP	1 piece	1 piece (SPQ 5)[1]	PU 10 pieces	PU 100 pieces
2	84	84	**20848-262**	–	–	**21101-856**
3	128.4	2	–	**30849-001**	**21101-853**	**21101-854**
3	128.4	3	–	**30849-004**		
3	128.4	4	–	**30848-354**		
3	128.4	5	–	**30848-378**		
3	128.4	6	–	**30848-380**		
3	128.4	7	–	**30848-382**		
3	128.4	8	–	**30848-356**		
3	128.4	10	–	**30848-386**		
3	128.4	12	–	**30848-358**		
3	128.4	14	–	**20848-013**		
3	128.4	21	–	**20848-020**		
3	128.4	28	–	**20848-027**		
3	128.4	42	**20848-047**	–		
3	128.4	63	**20848-068**	–		
3	128.4	84	**20848-097**	–		
4	172.9	28	–	**20848-268**	**21101-858**	–
4	172.9	42	**20848-269**	–		
4	172.9	63	**20848-270**	–		
4	172.9	84	**20848-271**	–		
6	261.8	2	–	**30849-002**	**21101-855**	**21101-856**
6	261.8	4	–	**30848-355**		
6	261.8	5	–	**30848-379**		
6	261.8	6	–	**30848-381**		
6	261.8	7	–	**30848-383**		
6	261.8	8	–	**30848-357**		
6	261.8	10	–	**30848-387**		
6	261.8	12	–	**30848-359**		
6	261.8	14	–	**20848-106**		
6	261.8	16	–	**20848-108**		
6	261.8	21	–	**20848-113**		
6	261.8	28	–	**20848-120**		
6	261.8	42	**20848-139**	–		
6	261.8	63	**20848-160**	–		
6	261.8	84	**20848-189**	–		
9	395.1	84	**20848-280**	–	**21101-859**	**21101-904**

•Front panel assembly kits, sleeves, collar screws, quick-release fasteners see page 6.73

1) SPQ (standard pack quantity): Part number includes 1 piece, but delivery is exclusively made in standard pack quantity (SPQ); please order at least the SPQ quantity or a multiple

EMC gasket stainless steel, for U-shaped front panel

1 Kit, 3U, 10pcs **21102-105**
1 Kit, 4U, 10pcs **21102-113**
1 Kit, 6U, 10pcs **21102-107**
1 Kit, 9U, 10pcs **21102-109**

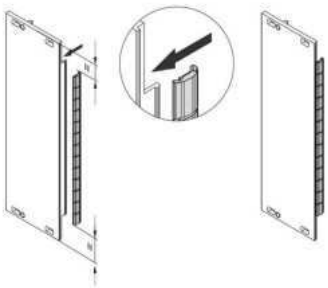

Subracks – EuropacPRO

FRONT PANELS, HINGED AND PIVOTED

ORDER INFORMATION

		Front panel, bottom-hinged		Front panel, pivoted
		shielded	unshielded	
		135842160	135842093	135842107
		Al, 2.5 mm,front anodised,rear conductive; textile EMC gasket hinge, Zn die-cast, nickel-plated; 2 / 3 x sleeve, PA; 2 / 3 x knurled screws or collar screws m2.5x12,3, St, nickel plated	Al, 2.5 mm, anodised, cut edges plain; hinge, Zn die-cast, nickel-plated; 2 / 3 x sleeve, PA; 2 / 3 knurled screws or collar screws M2.5 x 12.3, St, nickel-plated	Al, 2.5 mm, front anodised, rear conductive; hinge, die-cast zinc, chrome-plated; textile EMC gasket; 2/ 3 xsleeve, PA; 2 / 3 knurled screws or collar screws M2.5 x 12.3, St, nickel-plated
Height U	Width HP	1 piece	1 piece	1 piece
3	28	**20848-608**	**20838-280**	–
3	42	**20848-599**	**20838-271**	–
3	63	**20848-600**	**20838-272**	–
3	84	**20848-601**	**20838-273**	**20848-611**
4	42	**20848-605**	**20838-277**	–
4	63	**20848-606**	**20838-278**	–
4	84	**20848-607**	**20838-279**	–
6	28	**20848-696**	–	–
6	42	**20848-602**	**20838-274**	–
6	63	**20848-603**	**20838-275**	–
6	84	**20848-604**	**20838-276**	**20848-617**

NOTE

- Front panel can be removed in opened position (> 135°)

Part number in bold face type: ready for despatch within 2 working days
Part number in normal type: ready for despatch within 10 working days

SHIELDING IS REQUIRED BETWEEN THE FOLLOWING COMPONENTS OF A SUBRACK

- Front panel/rear panel and horizontal rail, see page 6.63
- Front panel and 19" bracket/corner profile or in case of depth-offset installation, see page 6.63
- Cover plate/horizontal rail, see page 6.51
- Cover plate/side panel, see from page 6.51
- Horizontal rail/horizontal rail in combined mounting (3 U + 3 U and 6 U), see page 6.67
- Shielding for backplane and side panel see page 6.65

-1- -2-

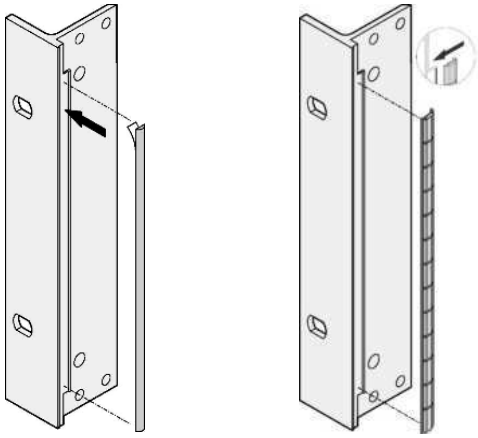

06108073

EMC shielding concepts

- Shielding concepts in accordance with IEEE and IEC
- Shielding effectiveness has been determined in various series of measurements in accordance with IEC 61587-3 and can be found online together with the relevant standard product
- The combined use of stainless steel and textile EMC gaskets is functionally possible without any problems

EMC shielding concept with EMC textile gaskets -1-

- The seal is affixed to the left-hand side of the subrack (viewed from front) or to the U-shaped front panel profile, respectively
- An EMC gasket with CuNi coating assures a long-term high level of shielding, typically 40 dB at 2 GHz
- Temperature-resistant adhesive layer is protected by a removable film
- Rear shielding is obtained using front panels or a rear hood
- Temperature range -40° C to +70° C or -40°C to +85°C

EMC shielding concept with EMC stainless gaskets -2-

- The seal is mounted to the left-hand side of the subrack (viewed from front) or to the U-shaped front panel profile, respectively
- An EMC gasket stainless steel assures a long-term high level of shielding, typically 40 dB at 2 GHz
- Rear shielding is obtained using front panels or a rear hood
- Temperature range -200° C to +160° C

Note: rear hood and corner profile cannot be used simultaneously

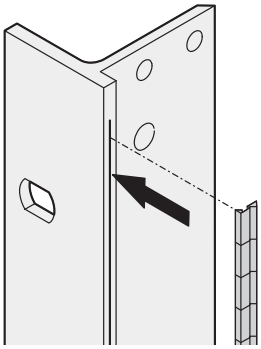

06108074

EMC shielding concept with stainless steel EMC gaskets and flat front panels)

- Symmetrical arrangement of EMC gaskets on the left and right hand sides of subrack and front panel
- Shielding: typically 40 dB at 2 GHz
- Can be used for temperatures above -200 up to +160° C

Note: rear hood and corner profile cannot be used simultaneously

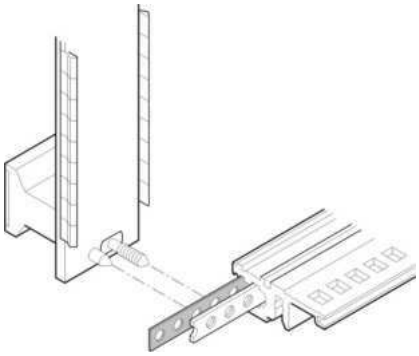

06112091

Front panel shielding concept

- Front panels are available for textile or stainless steel EMC gasket options
- Alignment pins are pressed-in in the front panel to position the gaskets securely and to compress them evenly
- An alignment pin positions the perforated strip in the horizontal rail
- Alignment pin and perforated strip provide an optimal positioning of the shielded assemblies; the front panels are not forced sideways by the shielding elements (SCHROFF patent)

Subracks – EuropacPRO

EMC GASKETS BETWEEN FRONT/REAR PANEL AND HORIZONTAL RAIL

ORDER INFORMATION

Stainless steel EMC gasket
between front panel/rear panel and horizontal rail

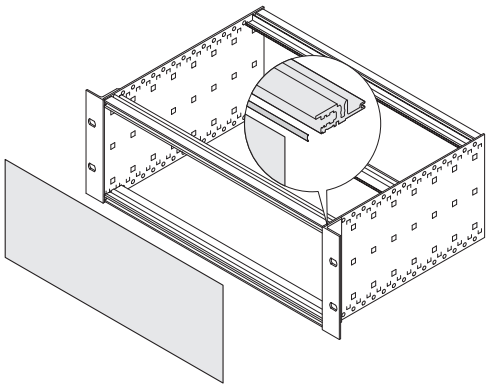
06102053

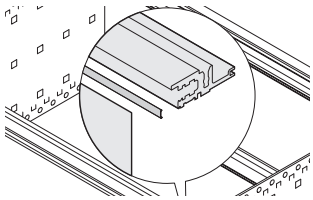
06102053

stainless steel; for front and rear horizontal rails (type VT)

Width HP	Depth mm	PU 10 pieces	PU 100 pieces
28	131.8	**24560-229**	–
42	202.9	**24560-231**	–
63	304.5	**24560-233**	–
84	416.6	**24560-235**	**24560-236**
Assembly tool, for stainless steel EMC gasket		**24560-270**	

EMC GASKETS BETWEEN FRONT PANEL AND 19" BRACKET/CORNER PROFILE

ORDER INFORMATION

Stainless steel EMC gasket
temperature range -200° C ... +160°C
between front panel/rear panel and19" bracket/corner profile

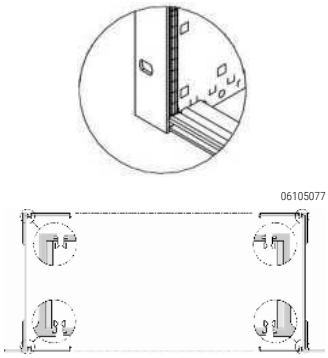
06105077

inserted laterally into the grooves of the front panel
06108070

Textile EMC gasket
temperature range -40° C ... +70°C
between front panel/rear panel and 19" bracket/corner profile

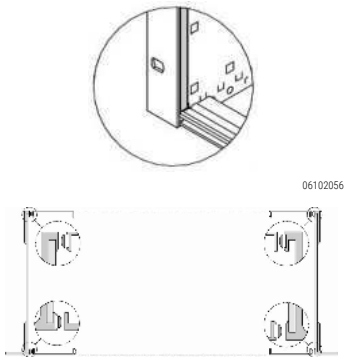
06102056

textile gasket, core: foam, sleeve: textile cladding with CuNi coating, UL 94 V-0
06108054

Stainless steel EMC gasket
temperature range -200° C ... +160°C
between front panel/rear panel and 19" bracket/corner profile

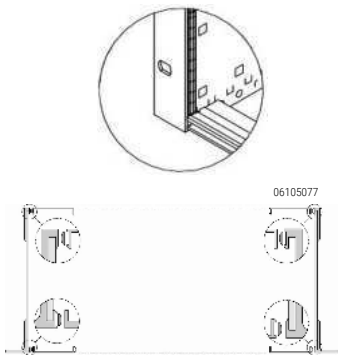
06105077

Stainless steel gasket which can be assembled to the U-shaped front panels and the 19" brackets for textile gaskets
06108054

Height U	Depth mm	PU 10 pieces	PU 100 pieces	PU 10 pieces	PU 100 pieces	PU 10 pieces	PU 100 pieces
3	97.5	**21101-705**	**21101-706**	**21101-853**	**21101-854**	**21102-105**	**21102-106**
4	142.5	**21101-713**	**21101-714**	**21101-858**	–	**21102-113**	–
6	232.5	**21101-707**	**21101-708**	**21101-855**	**21101-856**	**21102-107**	**21102-108**
9	365.0	**21101-709**	**21101-710**	**21101-859**	**21101-904**	**21102-109**	–

Assembly tool, for stainless steel EMC gasket

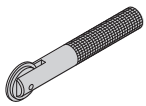

24560-270

Textile EMC gasket,
temperature range -40° C ... +85°C

	PU 10 pieces	PU 100 pieces
3 U	**21102-853**	**21102-854**
4 U	**21102-858**	–
6 U	**21102-855**	**21102-856**
9 U	**21102-859**	–

Part number in bold face type: ready for despatch within 2 working days
Part number in normal type: ready for despatch within 10 working days

EMC GASKETS BETWEEN HORIZONTAL RAIL AND HORIZONTAL RAIL

ORDER INFORMATION

		Stainless steel EMC gasket between horizontal rail and horizontal rail
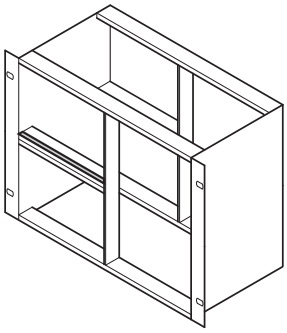 bpa46548		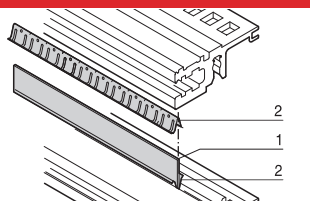 bza45877 Item 1: cover strip, Al, 1 mm, item 2: 2 x EMC seals (stainless steel); for shielding of 2 horizontal rails positioned directly one above the other if assembly area is divided vertically
Width HP	Depth mm	PU 1 kit
20	107.0	**24562-520**
28	147.0	**24562-528**
40	208.0	**24562-540**
42	218.0	**24562-542**
63	325.0	**24562-563**
84	431.0	**24562-584**

1) SPQ (standard pack quantity): Part number includes 1 piece, but delivery is exclusively made in standard pack quantity (SPQ); please order at least the SPQ quantity or a multiple

EMC GASKETS BETWEEN FRONT PANEL AND SIDE PANEL (DEPTH-OFFSET INSTALLATION)

ORDER INFORMATION

		Stainless steel EMC gasket between front panel and side panel (depth-offset installation)	Textile EMC gasket between front panel and side panel (depth-offset installation)
		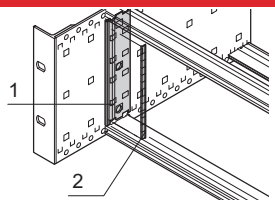 bpa45884 Item 1: 2 x support profiles, Al extrusion; item 2: 2 x stainless steel EMC gasket; fixing material kit for vertical EMC shielding between depth-offset shielded front panels and side panel	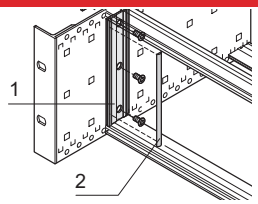 06102058 Item 1: 2 x support profiles, Al extrusion; item 2: 1 x EMC textile gasket; fixing material kit for vertical EMC shielding between depth-offset shielded front panels and side panel
Height U	Depth mm	PU 1 kit	PU 1 kit
3	97.5	**24562-199**	**24560-180**
4	142.5	24562-299	**24560-280**
6	187.5	**24562-499**	**24560-480**
Assembly tool, for stainless steel EMC gasket 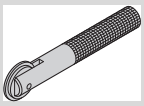		**24560-270**	–

Subracks – EuropacPRO

EMC GASKETS BETWEEN BACKPLANE AND SIDE PANEL

ORDER INFORMATION

			Stainless steel EMC gasket between backplane and side panel (depth-offset installation)
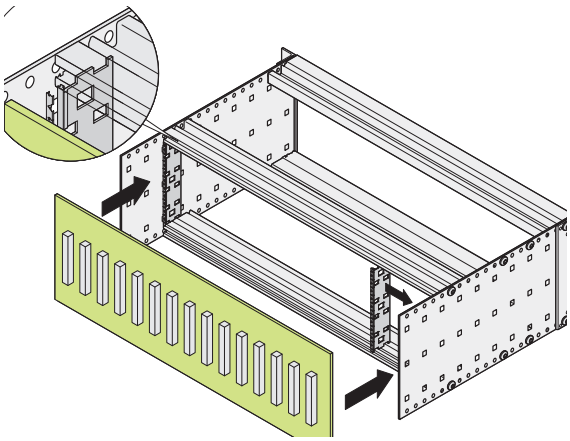			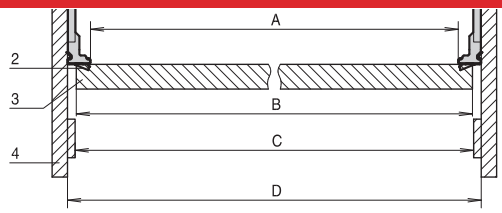 2 x support profile, Al extrusion, 2 x EMC gasket (stainless steel) Fixing materials kit and user manual; for vertical EMC shielding between shielded backplane and side panel; dimensions (84 HP): A = 425.8 mm, B < 429.9 mm, C = 429.8 mm, D = 431.8 mm
Height of the Subrack in U	Lenght in mm		PU 1 kit
3	110.00		**24561-199**
6	243.35		**24561-499**

- With an appropriate design the backplane can be used as shielding rear panel; for that purpose a rear horizontal rail (type L-VT or H-VT) for depth-offset installation must be used to ensure the horizontal contact
- For vertical contact the support profile can be fixed to the europacPRO side panel (depth grid 30 mm)

Part number in bold face type: ready for despatch within 2 working days
Part number in normal type: ready for despatch within 10 working days

SPECIAL INTERIOR MOUNTING PARTS

- Horizontal board mounting, see page 6.66
- Combined mounting: 3 U + 3 U and 6 U, see page 6.67
- Mounting plates, see page 6.68
- Central locking for PCBs, see page 6.69
- Divider plates, see page 6.69
- Air baffles, see page 6.70
- Telescopic slides, see page 6.71 to 6.72
- Fixing parts (bolts, nuts, assembly tools), see page 6.73

HORIZONTAL BOARD MOUNTING IN 3 OR 4 U SUBRACK

ORDER INFORMATION

			Horizontal board mounting in 3 or 4 U subrack		
			Board cage	Front frame for EMC shielding	Front frame, unshielded
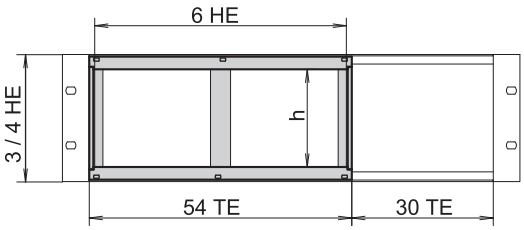 (1 TE = 1 HP, 1 HE = 1 U) bpa45914			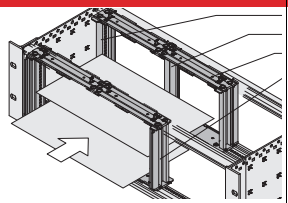 06102073 Struts, die-cast zinc; horizontal rails front and rear; threaded inserts, St, zinc-plated; fixing material kit; for horizontal mounting of double-height euroboards in 3 or 4 U high subracks/cases; 54 HP space required; **please order front frame for EMC shielding separately**	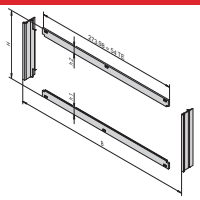 bpa45913 2 horizontal covers, Al 2.5 mm, front anodised, rear iridescent green chromated; 2 vertical trims, Al extrusion, passivated; stainless steel EMC gasket; front frame provides the contact between subrack and the sub-assemblies	bza43061 Al, 2.5 mm, clear anodised; front frame with cut-out, clear internal width w = 266.35 mm
Height U	Usable height h HP	Mounting variants Horizontal rail, front / Horizontal rail, rear	PU 1 kit	PU 1 kit	1 piece
3	20		**24564-117**	**24564-109**	34564-108
3	20		**24564-118**	**24564-109**	34564-109
4	28		**24564-217**	**24564-209**	**34564-208**
Assembly tool, for stainless steel EMC gasket		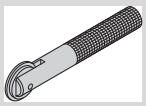	–	**24560-270**	–

* For direct backplane mounting

NOTE

- Please order front frame for EMC shielding separately

Subracks – EuropacPRO

COMBINED MOUNTING (6 U AND 2 X 3 U ONE ABOVE THE OTHER)

ORDER INFORMATION

	Combined mounting: horizontal and vertical subdivision (incl. front panel for stainless steel EMC gasket)	Alternative front panels for combined mounting		Splitting extrusion for combined mounting item 2
		unshielded front panel, 6 U, 2 HP item 6	front panel for textile EMC gasket, 6 U, 2 HP item 6	
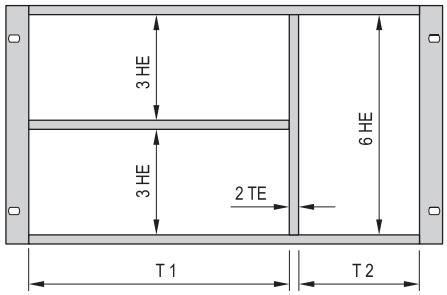	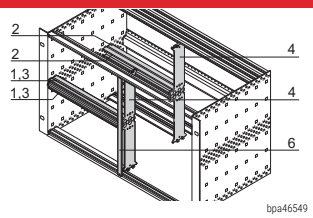 Item 1: 2 front horizontal rails (H-KD), Al extrusion, anodised; item 2: 2 rear horizontal rails (AB), Al extrusion, anodised; item 3: threaded inserts, St, zinc-plated; item 4: Zn die-cast support members; item 6: front panel 2 HP, 6 U, with EMC stainless steel gasket; 84:0 without items 4, 5 - Note see below 2)	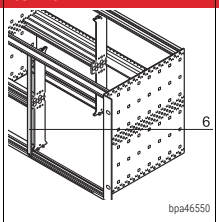 Al, 2.5 mm, front anodised, rear iridescent green chromated	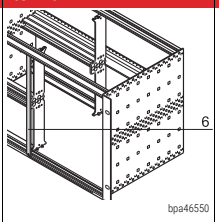 Al, 2.5 mm, U-profile with notch, 6 U, 2 HP	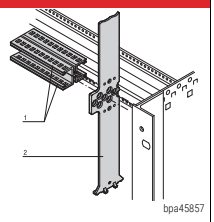 6 U, die-cast zinc; splitting extrusion is inserted in the grid holes of the horizontal rail; the splitting extrusion can be bolted
Width pitch T1:T2 HP	PU 1 kit	1 (SPQ 5)	1 piece (SPQ 5)[1)]	1 piece
20:62	**24562-420**	**30847-472**	**30849-140**	**64560-010**
40:42	**24562-440**			
42:40	**24562-442**			
63:19	**24562-463**			
84:0	**24562-484**			
Torx countersunk screw M4 × 14, zinc-plated, PU 100 pieces to fixsplitting extrusion/horizontal rail	–	–	–	**24560-145**
Panhead screw M2.5 × 10, St, zinc-plated, PU 100 pieces to fix horizontal rail/splitting extrusion	–	–	–	**24560-179**
Pozidrive/slotted collar screw M2.5 x 12.3, St, nickel-plated, PU 100 pieces	–	**21101-101**	**21101-101**	–
Pozidrive/slotted collar screw M2.5, black, zinc-plated, PU 100 pieces	–	**21101-102**	**21101-102**	–
Washer 2.7 x 5 x 1, PA 6, PU 100 pieces	–	**21101-121**	**21101-121**	–
Textile gasket, core: foam, sleeve: textile cladding with CuNi coating, UL 94 V-0 PU 10 pieces	–	–	**21101-855**	–

2) The following guide rails cannot be used: type "accessory", type "accessory, strengthened" and type "for 4.4" PCB"

- Subdivision of the 6 U assembly area into:
  - 2 x 3 U
  - 1 x 6 U
- Designed to accomodate euroboards (100 mm high) and double euroboards (233.35 mm high)

NOTE

- Please order EMC gasketing kit for horizontal rails separately, see page 6.51
- Please order perforated strips for horizontal rails separately, see page 6.37
- Please order rear centre horizontal rail separately, see page 6.35

Part number in bold face type: ready for despatch within 2 working days
Part number in normal type: ready for despatch within 10 working days

ORDER INFORMATION

				Mounting plate can be used in combination **with cover plate**	Mounting plate for the use **without cover plate** for complete subrack width	Mounting plate for the use **without cover plate** for partial width of a subrack
Mounting plate for use **without** cover plate 135395116 Mounting plate for use **with** cover plate 135395129				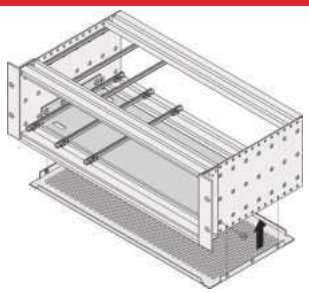 108230546 Al, 1.5 mm; mounting is only possible over the entire width between the side panels; width of mounting plate = W - 9.71 mm Torque moment for fastening screws = 1,5 Nm	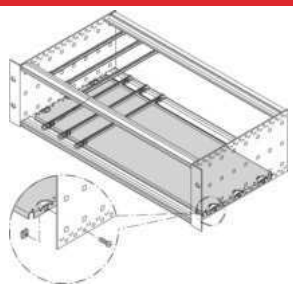 114064773 Al, 1.5 mm; for mounting over complete width. Torque moment for fastening screws = 1,5 Nm	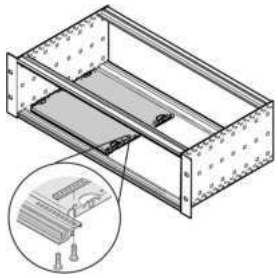 Al, 1.5 mm; for mounting over partial width,
Width W HP	W mm	Depth mm	Board length mm	1 piece	1 piece	1 piece
28	146.88	112.5	160	34563-001	**34562-745**	**34562-745**
28	146.88	172.5	220	**34563-009**	**34562-749**	**34562-749**
28	146.88	232.5	280	–	**34562-753**	**34562-753**
28	146.88	292,2	340	–	**34562-757**	**34562-757**
42	217.99	112,5	160	**34563-002**	**34562-746**	**34562-746**
42	217.99	172,5	220	**34563-014**	**34562-750**	**34562-750**
42	217.99	232,5	280	–	**34562-754**	**34562-754**
42	217.99	292,2	340	–	**34562-758**	**34562-758**
63	324.67	112,5	160	**34563-003**	**34562-747**	**34562-747**
63	324.67	172,5	220	**34563-019**	**34562-751**	**34562-751**
63	324.67	232,5	280	–	**34562-755**	**34562-755**
63	324.67	292,2	340	–	**34562-759**	**34562-759**
84	431.35	112,5	160	**34563-004**	**34562-748**	–
84	431.35	172,5	220	**34563-024**	**34562-752**	–
84	431.35	232,5	280	**34563-026**	**34562-756**	–
84	431.35	292,2	340	**34563-028**	**34562-760**	–
84	431.35	352,5	400	**34563-042**	**34562-870**	–
84	431.35	412,5	460	**34563-044**	**34562-871**	–
Assembly kit for mounting plate, PU 1 kit (Torx countersunk screw M4 x 5, St,zinc-plated, 16 pieces; screw M4 x 6, St, zinc-plated, 14 pieces; square nut M4, St, zinc-plated, 14 pieces, 1x User Manual				**24560-184**	**24560-184**	–
Assembly kit for partial mounting plate, PU 1 kit 2 x St, threaded inserts 13HP, 5,0 x 2,0 mm, zinc plated; M2,5mm, 6 x screw M2,5x6, (0,37Nm) 5 x square nut M4, 5 x screw M4x6 (1,5Nm) 1 x User manual				–	–	**24560-127**

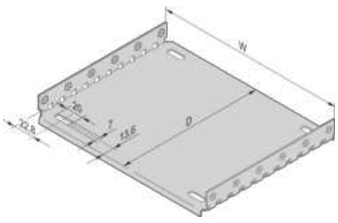

108230639

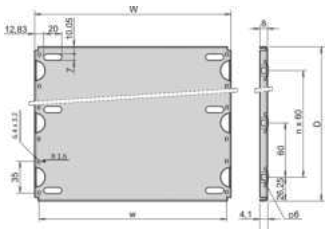

06103057

NOTE

- For installation and fixing of heavy components
- In addition to the mounting plate, (EMC) cover plates can also be fitted to the subrack
- The mounting plate is as wide as the subrack or system case and is fixed to the side panels
- A guide rail can be fitted on the first and last slot
- Guide rails type "4.4" and type "strengthened" cannot be used

CENTRAL LOCKING

ORDER INFORMATION

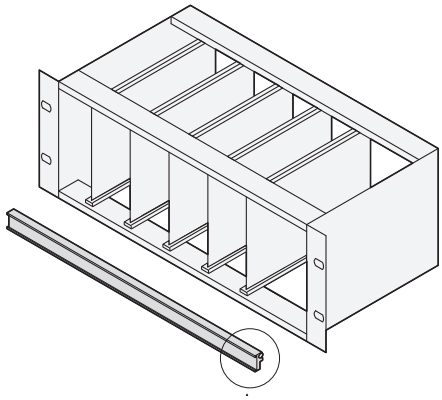
06197010

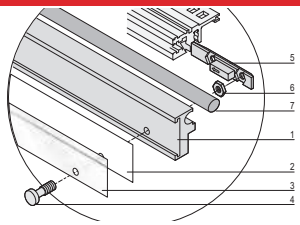

bza45819

Item 1: central rail, Al, anodised;
item 2: ID cardboard, white;
item 3: transparent cover strip, plastic;
item 4: 2 x knurled screw;
item 5: 2 x slide nut;
item 6: 2 x hexagon nut M2.5;
item 7: rubber gasket;
central locking allows joint locking of PCBs and serves as identification strip;
can be fitted to front and rear horizontal rails,
suitable for 84 HP width

Width HP	Length mm	Central locking for PCBs without front panels 1 piece
84	426.0	**24560-167**

DIVIDER PLATE

ORDER INFORMATION

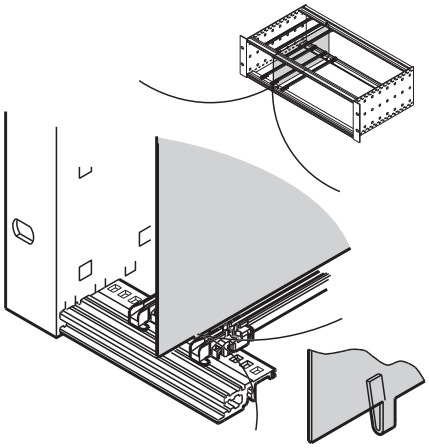
bpa45912

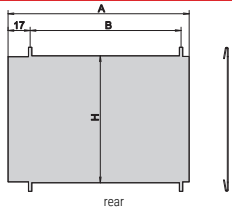

bpa45911

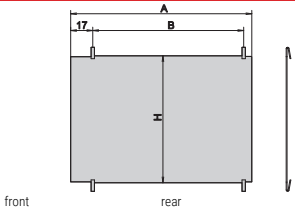

06105078

Stainless steel, 1 mm, is mounted by clipping onto horizontal rail,
space requirement on component side 2 mm;
mounting direction varies with shielding design (EMC stainless steel or textile gasket);
retrofitting the divider plate in an already-assembled subrack/case
will first require dismantling of the horizontal rails;
where front panels are unshielded, both mounting directions are possible

Height U	Depth mm	A mm	B mm	H mm	Divider plate Mounting position when stainless steel EMC gasket is used	Divider plate Mounting position when textile EMC gasket is used PU 10 pieces
3	160	158.3	135.0	113.5	**34562-761**	
3	220	218.3	195.0	113.5	**34562-762**	
6	160	158.3	135.0	246.9	**34562-763**	
6	220	218.3	195.0	246.9	**34562-764**	

Part number in bold face type: ready for despatch within 2 working days
Part number in normal type: ready for despatch within 10 working days

AIR BAFFLES FOR SLOTS

ORDER INFORMATION

			Air baffle without front panel	Air baffle with front panel	
				Front panel with lateral groove for stainless steel EMC gasket	U front panel for textile EMC gasket
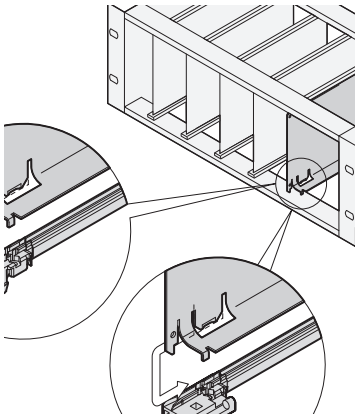 06101507			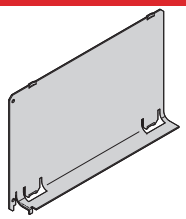 107887484 Al, 1 mm, incl. fixing material kit; prevents an air short circuit in unused slot positions; is pushed into the groove of the guide rail	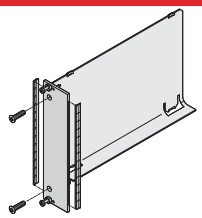 06108087 Air baffle, Al, 1 mm; front panel, Al, 2.5 mm, front anodised, rear conductive; stainless steel EMC gasket; fixing material kit prevents an air short circuit in unused slot positions; is pushed into the groove of the guide rail	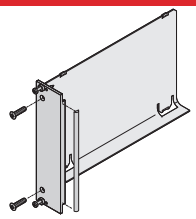 06108088 Air baffle, Al, 1 mm, front panel, Al extrusion, 2.5 mm, front anodised, rear conductive; textile EMC gasket, fixing material kit prevents an air short circuit in unused slot positions; is pushed into the groove ofthe guide rail
Depth mm	Width HP	Height U	1 piece	1 piece	1 piece
160	4	3	**34562-823**	**20848-712**	**20848-728**
160	4	6	**34562-826**	**20848-720**	**20848-736**
220	4	3	**34562-824**	20848-713	20848-729
220	4	6	34562-827	20848-721	20848-737
Assembly tool for stainless steel EMC gasket, 1 piece 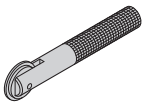			–	**24560-270**	–

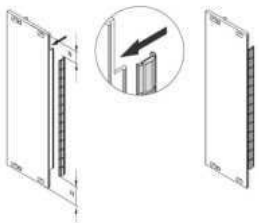

EMC gasket stainless steel, for U-shaped front panel

1 Kit, 3U, 10pcs **21102-105**

1 Kit, 6U, 10pcs **21102-107**

NOTE

- Air baffle for 280 mm deep and for 80 mm rear I/O boards or other width (HP) available on request

Subracks – EuropacPRO

SIMPLE TELESCOPIC SLIDE FOR ASSEMBLY OF SUBRACKS IN CABINETS

06101006

- For mounting 84 HP wide subracks in the 19" plane
- Loading capacity: 25 kg per pair
- The guiding profile is matched to the fixing dimension in the cabinet (it is bolted to the 19" profile of the cabinet); the adaptor rail is matched to the depth and fixing dimension on the subrack (it is inserted into the guiding profile like a telescopic slide)
- Safety note:
  No protection against extraction, no stop at full extension

Order Information

Telescopic slides with guiding profile for fitting in cabinets

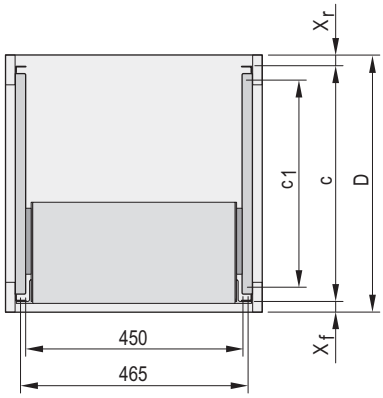

06108082

Description	Depth D mm	xf mm	xr mm	C mm	c1 mm	Part no.
VARISTAR	600	50	50	500	368,8	**24562-464**
VARISTAR	800	50	50	700	568,8	**24562-466**
VARISTAR	900	50	50	800	668,8	**24562-467**
VARISTAR	1000	50	50	900	768,8	**24562-468**
VARISTAR	1100	50	50	1000	868,8	**24562-472**
VARISTAR	1200	50	50	1100	968,8	**24562-473**
eurorack	600	60	60	480	397	**24562-449**
eurorack	800	60	60	680	597	**24562-451**
eurorack	900	60	60	780	697	**24562-452**
NOVASTAR	500	33	60	407	350	**24562-460**
NOVASTAR	600	33	60	507	450	**24562-461**
NOVASTAR	800	33	60	707	650	**24562-474**
Lab rack	250	0	0	250	162	**24562-446**

x_f, x_r: Distance of 19" plane to cabinet edge (front, rear)
c: Distance of 19" planes from each other,
c1: Fixing dimension of guiding profile on 19" panel/slide mounts

Order Information

Telescopic slides with adaptor rail for subracks

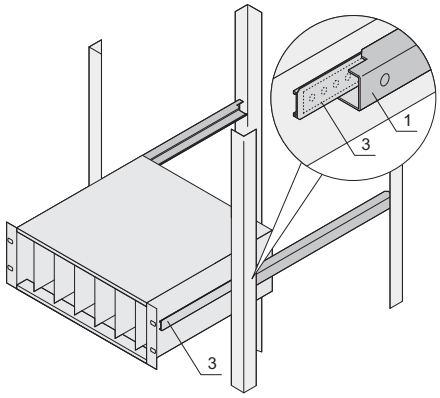

06108072

For subrack depth mm	Part no.
175	**24562-453**
235	**24562-454**
295	**24562-455**
355	**24562-456**
415	**24562-457**
475	**24562-458**

Part number in bold face type: ready for despatch within 2 working days
Part number in normal type: ready for despatch within 10 working days

Subracks – EuropacPRO

TELESCOPIC SLIDE, NARROW, FOR SUBRACK

00516001

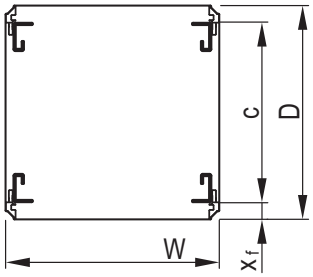

01004146

C dimensions: Varistar 500 mm and 700 mm, Novastar 507 mm to 707 mm

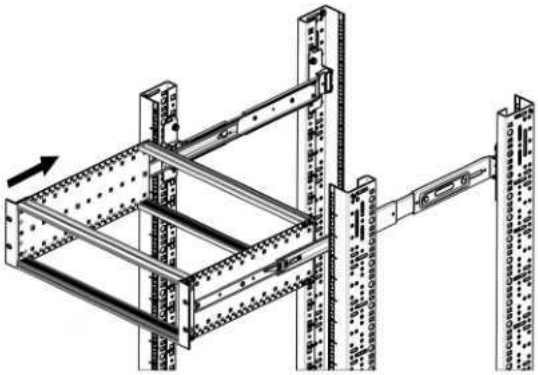

- Suitable for 84 HP width subracks (type F, type H, type L)
- Locks at full extension
- Hinged
- Extension length > 100 %
- Rail width 7.5 mm
- Maximum clear width of extension/drawer w = 84 HP (435 mm)

DELIVERY INCLUDES

Item	Qty	Description
1	2	Telescopic slide, St, zinc-plated

ORDER INFORMATION

Length L mm	Extension length Y mm	Load-carrying capacity kg	Part no.
559	See table Technical data	15	**60110-440**
Accessories			
Fixing materials kit for Varistar, to mount 2 telescopic slides, PU 1 kit			**21120-193**
Fixing materials kit for Novastar, to mount 2 telescopic slides, PU 1 kit			**21120-194**
Delivery: supplied loose with cabinet or frame			**Part no./35**

Technical data

Length L mm	Extension length Y Varistar SL/HD mm	Novastar SL mm	Novastar HD mm
559	553	565	555

NOTE

- To mount on 19" plane please order assembly kit separately
- Telescopic rail cannot be combined with BGTR with corner profile (rear)

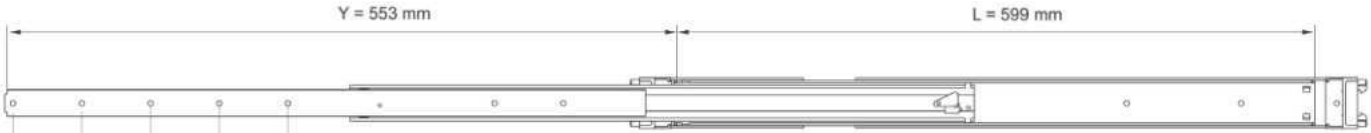

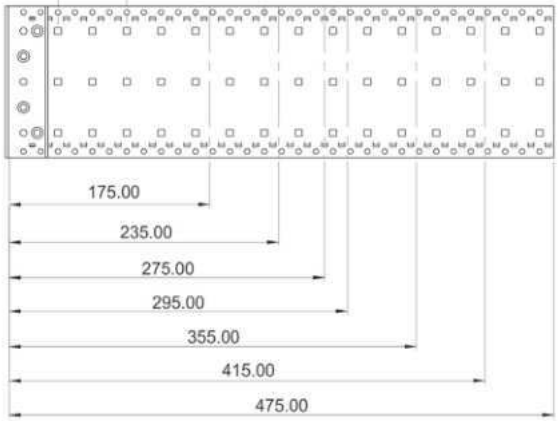

00521051

Screw-on position for telescopic slide on side panel of subrack

21120-193

ASSEMBLY PARTS

- Quick-release fasteners, see page 6.73
- Sleeves, see page 6.73
- Screws, see page 6.74 to 6.76
- Cage nuts, see page 6.76
- Tools / Tape measure, see page 6.78

QUICK-RELEASE FASTENERS

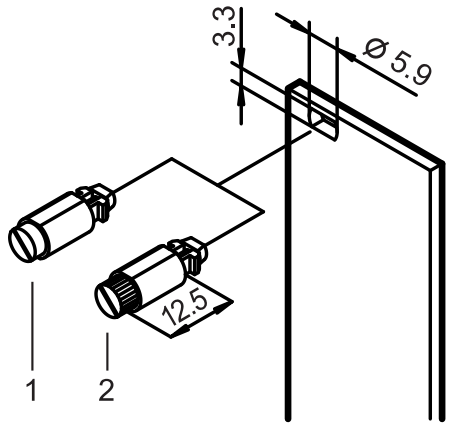

06702062

- Vibration and shock proof
- 1/4 rotary lock with defined stop
- Detection of locking position through slot position

DELIVERY COMPRISES

Qty	Description
1	Locking pin, St, locking, Zn die-cast
1	Press-in sleeve, POM

ORDER INFORMATION

Item	Description	Qty/PU	Part no.
1	With slotted head, grey	100	**21101-847**
1	With slotted head, black	100	**21101-848**
2	With knurled and slotted head, grey	100	**21101-849**
2	With knurled and slotted head, black	100	**21101-850**

NOTE

Quick-release fasteners: mounting without threaded inserts

SLEEVES

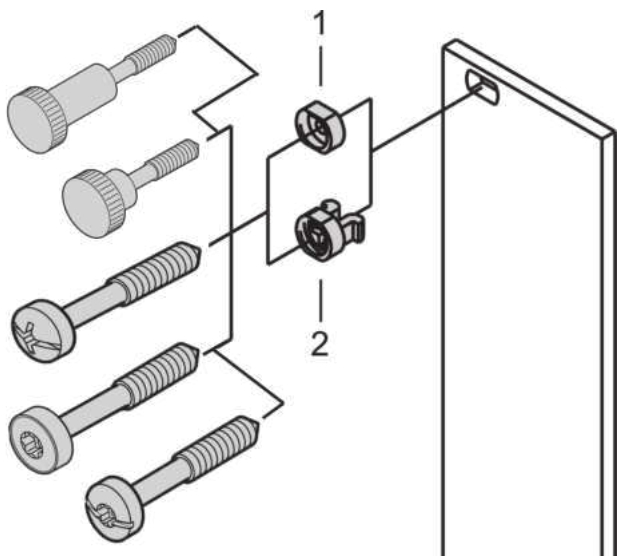

107887281

ORDER INFORMATION

Item	Description	Qty/PU	Part no.
2	Plastic sleeve, PA, grey	100	**21100-464**
2	Plastic sleeve, PA, black	100	**21100-591**
1	Metal sleeve, brass, nickel-plated	10	**21100-659**
1	Metal sleeve, brass, nickel-plated	100	**21100-660**
1	Metal sleeve, brass, black	10	**21100-885**
1	Metal sleeve, brass, black	100	**21100-886**
1	Metal sleeve, stainless steel	10	**21100-661**
1	Metal sleeve, stainless steel	100	**21100-662**

NOTE

- Metal sleeves must be pressed-in in front panels
- Sleeve does not fit in 2 HP wide front panels

COLLAR SCREWS

ORDER INFORMATION

	Description	Application	Torque	Material	Dimension	Qty/PU	Part no.
137813732	Collar screw with philips drive/slot	For mounting of front panels when when using threaded inserts	max. 0,3 Nm	St, nickel-plated	M2.5 x 12.3	100	**21102-026**
108909341	Collar screw with pozi drive/slot	For mounting of front panels when when using threaded inserts	max. 0,3 Nm	St, nickel-plated	M2.5 x 12.3	100	**21101-101**
			max. 0,3 Nm	Stainless steel	M2.5 x 12.3	100	**21101-906**
			max. 0,3 Nm	St, zinc-plated, black	M2.5 x 12.3	100	**21101-102**
	Collar screw with Torx 8 /slot	For mounting of front panels when when using threaded inserts	max. 0,3 Nm	St, nickel-plated	M2.5 x 12.3	100	**21101-976**
	Collar screw Torx 8	For mounting of front panels when when using threaded inserts	max. 0,3 Nm	St, nickel-plated	M2.5 x 12.3	100	**21101-782**
137813729			max. 0,3 Nm	St, zinc-plated, black	M2.5 x 12.3	100	**21101-783**
	Collar screw with knurled head	For mounting of front or side hingded front panels when using threaded inserts or slides (page 6.68)	max. 0,3 Nm	Brass, nickel-plated	M2.5 x 12.3	100	**21101-749**
	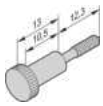	For mounting of front or side hingded front panels when using threaded inserts or slides (page 6.68) For horizontal rails with long lip (H-LL or R_LL)	max. 0,3 Nm	Brass, nickel-plated	M2.5 x 12.3	100	**21101-909**

TORX SCREWS, SELF-FORMING

ORDER INFORMATION

	Description	Application	Torque	Material	Dimension	Qty/PU	Part no.
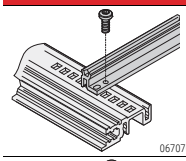 06707058	Torx panhead screw, self-forming	For extra-robust Al guide rails;	max. 0,2 Nm	St, zinc flake coating, black	2.5 x 7.3	100	**24560-157**
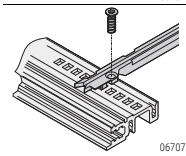 06707058	Torx countersunk screw, self-forming	For 4.4" board height, guide rail on horizontal rail, europacPRO, ratiopacPRO	max. 0,2 Nm	St, zinc-plated	2.5 x 7.7	100	**24560-158**
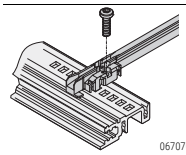 06707058	Torx panhead screw, self-forming	For plastic guide rail on horizontal rail; for panel bracket on horizontal rail;	max. 0,2 Nm	St, zinc-plated	2.5 x 9.3	100	**24560-141**
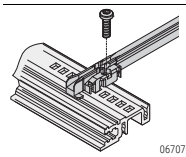 06707058	Torx panhead screw, self-locking	For plastic guide rails on horizontal rails	max. 0,2 Nm	St, zinc-plated	2.5 x 9.3	100	**21500-039**
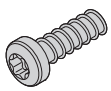 06707058	Torx panhead screw	For 6 U support member, backplane mounting, centre horizontal rail		St, zinc-plated	2.5 x 10	100	**24560-179**

Subracks – EuropacPRO

COUNTERSUNK SCREWS

ORDER INFORMATION

	Description	Application	Material	Dimension	Qty/PU	Part no.
135482278	Torx screw	For support profiles europacPRO, ratiopacPRO	St, zinc-plated	M4 x 5	100	**24560-139**
		For mixed board assembly and assembly of shortened horizontal rail on support member, with GND/earthing function	St, zinc-plated	M4 x 14	100	**24560-145**

TORX PANHEAD SCREWS

ORDER INFORMATION

	Description	Application	Material	Dimension	Qty/PU	Part no.
135485443	Torx panhead screw	For Z-rails and connector assembly	St, nickel-plated	M2.5 x 7	100	**24560-147**
		For perforated rails	St, nickel-plated	M2.5 x 10	100	**24560-148**
135485450		For backplane mounting	St, nickel-plated	M2.5 x 12	100	**24560-161**
			St, nickel-plated	M2.5 x 14	100	**24560-162**
aza45178	Washer	For insulated backplane mounting	Plastic, PA	2.8 x 6.3 x 2	100	**21101-964**
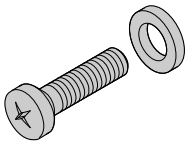 aza45940	Screw + plastic washer (PA)	For backplane mounting	St, nickel-plated	M2.5 x 12	100	**21100-777**
135482269	Torx panhead screw	To bolt on support bracket, rear hood, corner profile on side panel, lengthening bracket and connecting bracket	St, zinc-plated	M4 x 6	100	**24560-135**
		To bolt-on cover plate or mounting plate, with GND/earthing function	St, zinc-plated	M4 x 6	100	**24560-151**
		To bolt-on cover plate or mounting plate, with GND/earthing function, self-forming thread	St, zinc-plated	M4 x 6	100	**21101-884**
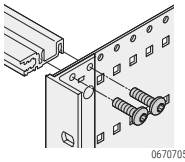 06707058		For horizontal rail on side panel if guide rails are bolted to slot 1	St, zinc-plated	M4 x 10	100	**24560-155**
135482266		For horizontal rail on side panel, with GND/earthing function	St, zinc-plated	M4 x 14	10	**24560-131**
		For horizontal rail on side panel, with GND/earthing function	St, zinc-plated	M4 x 14	100	**24560-130**

Part number in bold face type: ready for shipping within 2 working days
Part number in normal type: ready for shipping within 10 working days

GRUB SCREWS

ORDER INFORMATION

	Description	Application	Material	Dimension	Qty/PU	Part no.
135545261	Grub screw	For threaded inserts M2.5 and perforated strips Torque: 0,37Nm	Stainless steel	M2.5 x 9, Torx8	100	**21102-980**
		For threaded inserts M2.5	St, nickel-plated	M2.5 x 8	100	**21100-276**
135545261		For threaded inserts M3	St, zinc-plated	M3.0 x 8	100	**21100-646**

SQUARE NUTS

ORDER INFORMATION

	Description	Application	Material	Dimension	Qty/PU	Part no.
	Square nut	For fixing: parts to side panels, support profiles, mounting plates	St, zinc-plated	M4	100	**24560-140**

ASSEMBLY KITS

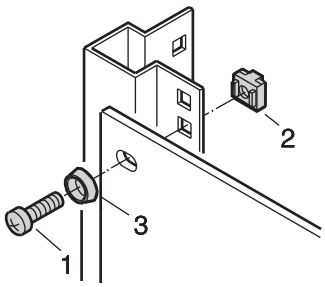

136069949

SC128XXX

135436392

135485321

- For assembly of subracks in cabinets or 19" cases
- For assembly of desk-top cases in cabinets by means of 19" brackets

DELIVERY COMPRISES (kit)

Item	Qty	Description
1	1	Pozidrive screw M6 × 16, zinc-plated
2	1	Plastic washer, ABS, black
3	1	Cage nut M6, steel nickel plated

ORDER INFORMATION

Description	Part no.
PU = 8 × screw, washer, nut	**21100-435**
PU = 50 each of M6 screw, washer and cage nut	**21101-809**
PU = 100 each of M6 screw, washer and cage nut	**21101-810**

- For 19" brackets with material thickness of 1.5 mm, see "Assembly kits" in chapter Cabinet accessories

Subracks – EuropacPRO

SLIDE, TO ACCOMODATE 2 NUTS

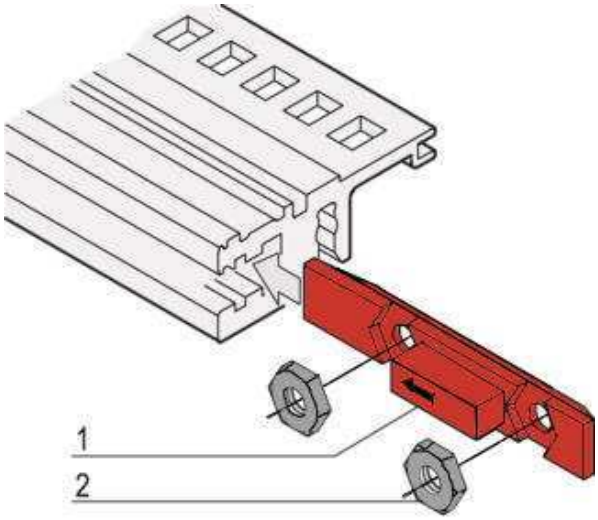

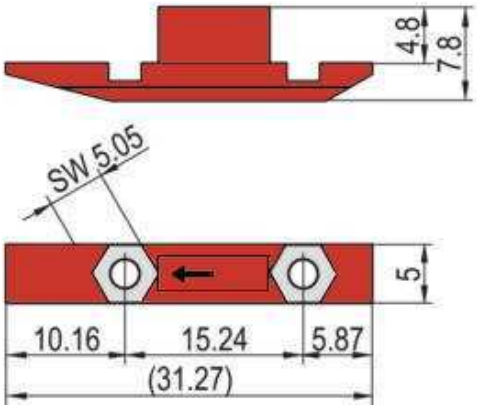

06702060

- The slide is pushed into the groove of the horizontal rail to front or rear (type VT)

DELIVERY COMPRISES (kit)

Item	Qty	Description
1	1	Slide, PBT, red, UL 94 V-0
2	2	Nut, M2.5, St, acier nickelé

ORDER INFORMATION

Description		Part no.
Slide nut kit 1	100 slides/200 nuts	**24560-165**
Slide nut kit 2	12 slides/24 nuts	**24560-166**

NOTE

- Nuts used in item 3 suitable for:
  - hinged front panels, 84 HP
  - front or rear panels, 84 HP
- Nuts used in item 4 suitable for:
  - hinged front panels
- Nuts used in item 3 and 4 suitable for:
  - two front panels

ASSEMBLY TOOLS

ORDER INFORMATION

	Description	Application	Dimension	Qty/PU	Part no.
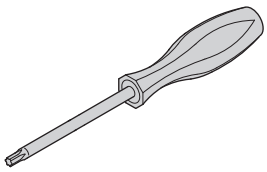 AZA45925	Torx screwdriver	T 8 torx	T8	1	**64560-026**
		To fix the top cover locking	T10	1	**64560-230**
		T 20 torx	T20	1	**64560-027**
135483941	Assembly tool	Exclusively to fix stainless steel EMC gaskets in horizontal rails	–	1	**24560-271**
135542978	Assembly tool	To fix stainless steel EMC gaskets on front panels with lateral slots	–	1	**24560-270**

NOTE

- Assembly tool to insert keying/coding pegs in guide rails is available on request

TAPE MEASURE

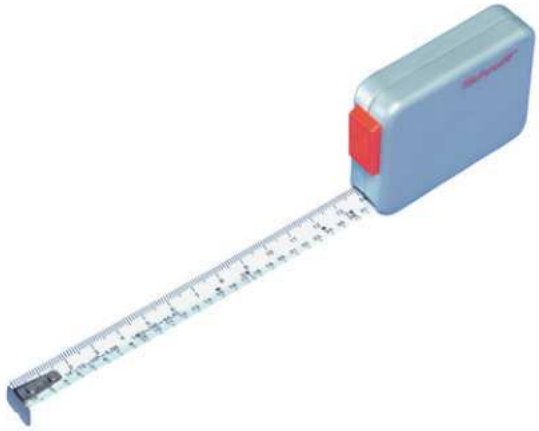

32506001

- Measuring tape with cm, U-, HP-division (length 2 m)
- Plastic housing, metal measuring tape with automatic collection

ORDER INFORMATION

Description	Qty/PU piece	Part no.
Tape measure	1	**89009-001**

Subracks – EuropacPRO

APPLICATION EXAMPLES

Application: Transportation/defense sectors

06108006

- Mounting frame to accomodate a 36 HP wide railway subrack, frame from stainless steel

06103001

- Robust assembly by double bolt-on fixing
- Lateral ducting in cabinet
- Combined mounting 6 U+ 2 x 3 U

Application: Measurement, control and instrumentation sectors

06108002

- Combined mounting with 2 x 3 U in 6 U
- Divider plate to separate different sections
- Installation with strengthened guide rails

06108003

- Subrack with additional telescopic fan unit
- Adaptation at bottom and top integrated into the side panel

Application: Telecoms sectors

06112023

- Shielded subrack for special applications with mounting plate, cover and base plate
- Mounting plate for heavy assemblies

06101005

- Subrack with plastic cable ducting for fibre optic cables
- Terminal area at top

Subracks – EuropacPRO

PLATFORM-BASED STANDARD SOLUTIONS FOR INDIVIDUAL REQUIREMENTS

Practical technology without time-consuming assembly. The modular europacPRO product platform allows a wide range of possible applications with only a few components. The intelligent design of all components results in remarkably simple and fast management in assembly and components.

Simple assembly with europacPRO kits:

06107001

Delivered in space-saving flat packs. The threaded inserts or EMC gasket (depending on selected kit) are already pre-mounted on the horizontal rail.

Two ways of reaching your desired product:

- Kits
- Individual configuration

Individual configuration:

SIDE PANELS TYPE F FOR STAINLESS STEEL GASKET

ORDER INFORMATION

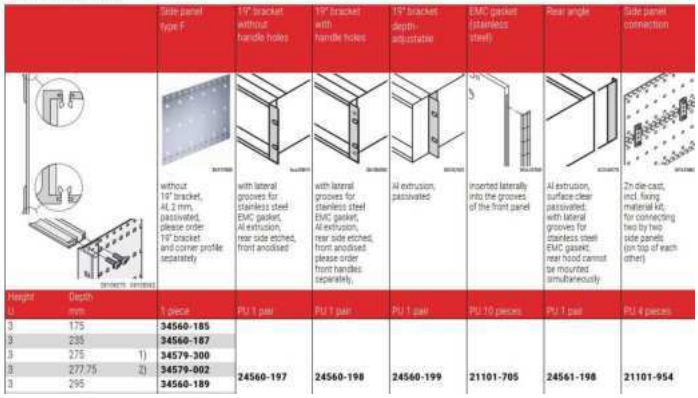

Height U	Depth mm	Side panel type F	19" bracket without handle holes	19" bracket with handle holes	19" bracket depth-adjustable	EMC gasket (stainless steel)	Rear angle	Side panel connection
		without 19" bracket, Al, 2 mm, passivated, please order 19" bracket and corner profile separately	with lateral grooves for stainless steel EMC gasket, Al extrusion, rear side etched, front anodised	with lateral grooves for stainless steel EMC gasket, Al extrusion, rear side etched, front anodised, please order front handles separately,	Al extrusion, passivated	inserted laterally into the grooves of the front panel	Al extrusion, surface clear passivated, with lateral grooves for stainless steel EMC gasket, rear hood cannot be mounted simultaneously	Zn die-cast, incl. fixing material kit, for connecting two by two side panels (on top of each other)
		1 piece	PU 1 pair	PU 1 pair	PU 1 pair	PU 10 pieces	PU 1 pair	PU 4 pieces
3	175	**34560-185**						
3	235	**34560-187**						
3	275 1)	**34579-300**						
3	277.75 2)	**34579-002**	**24560-197**	**24560-198**	**24560-199**	**21101-705**	**24561-198**	**21101-954**
3	295	**34560-189**						

06109052

You design your subrack as you wish, then receive it fully assembled via our ServicePLUS assembly service (even for orders of just one). We can also carry out individual modifications and cut-outs; and when time is short can do so very fast via ServicePLUS express.

HORIZONTAL RAILS AND SIDE PANELS FOR DIFFERENT LOAD-CARRYING CLASSES

06197007

Light

06197008

Heavy

06112004

Rugged

Horizontal rails are available for three load classes:

- "light" (load up to approx. 7.5 kg)
- "heavy" (load > 7.5 kg)
- "rugged" (load 15 kg)

06197002

Type Light

06197003

Type Flexible

06197004

Type Heavy

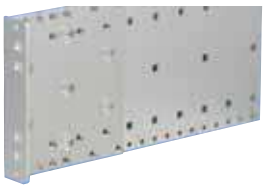

06112021

Type Rugged

Side panels for 4 different load classes

- Light: low-cost version with built-in 19" mounting bracket
- Flexible: with separate, depth-adjustable 19" mounting bracket
- Heavy: with integrated, tox-cold welded 19" mounting bracket, e.g. for shock and vibration environments up to 5 g
- Rugged: with integrated, tox-cold welded 19" mounting bracket and higher material thicknesses for extreme mechanical stresses, e.g. for increased shock and vibration environments up to 25 g
- The combination of the 3 horizontal rail variants with the 4 types of side panel results in an almost unlimited variety of potential applications for various market requirements

Subracks – EuropacPRO

GUIDE RAILS FROM PLASTIC AND ALUMINIUM PROFILES

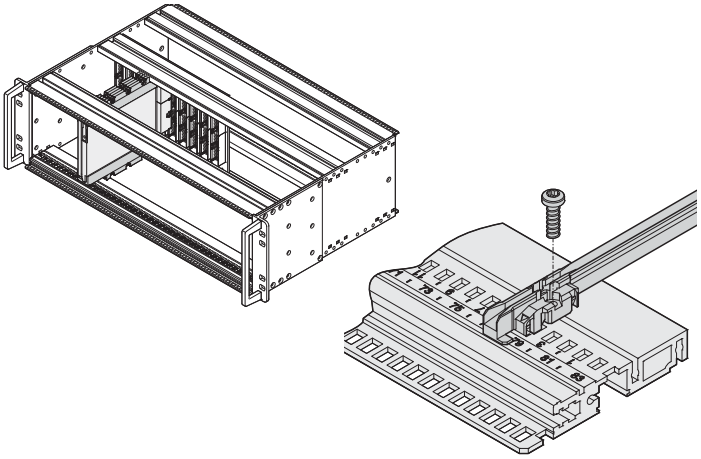

06112052 06111059

Guide rails form the interface between the subrack mechanics and the assemblies (boards, plug-in units, frame type plug-in units, drive unit modules, ...).

Robust snap-in fixings on the plastic rails assure a secure grip, even when exposed to vibrations. In the case of H and R-type horizontal rails the guide rails can also be bolted on. For extreme stresses, guide rails in aluminium extrusion are used.

To ensure that the wrong subassembly is not inserted into the wrong space we offer a mechanical coding to IEEE 1101.10/11 and IEC 60297-3-103.

The continuous numbering on the horizontal rail (from 28 HP) and the markings on the guide rails facilitate quick fitting in the correct position.

We offer the appropriate adaptors for accommodating VPX or CompactPCI boards with strengthening frame or conduction-cooled assemblies (CCA) installed in a subrack.

ELECTROMAGNETIC SHIELDING AND ESD

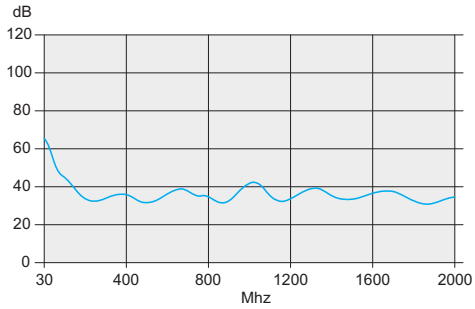

06108081

The product platform europacPRO offers a variety of off-the-shelf solutions to assure electromagnetic compatibility (EMC) and to avoid electrostatic discharge (ESD).

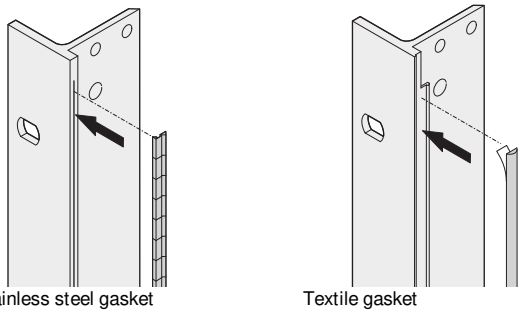

Stainless steel gasket Textile gasket

06108074 06108073

Two shielding concepts
It can't be more secure!

Two types of shielding concepts to front/rear of the subrack allow the use all Schroff frontpanels.

The shielding at the front of the subrack is by means of stainless steel or textile EMC gaskets.

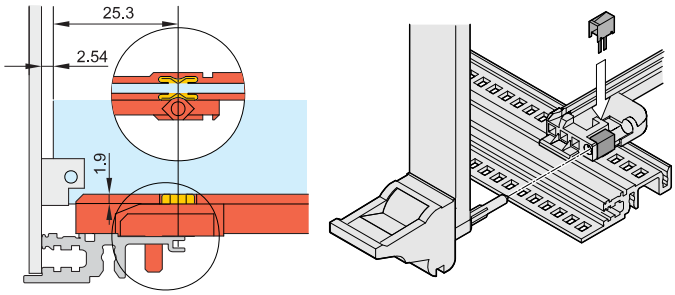

04503050 06103052

ESD (electrostatic discharge)
To avoid electrostatic discharge when inserting PCBs, ESD contacts are clipped into the guide rails. These establish a conductive connection between PCB and subrack-earth. Under IEC 60297-3-101 two ESD areas are defined on the euroboard. The ESD clips of the guide rail of the europacPRO subrack allow the assembly of both following variants:

- ESD area (bottom and top) over the complete board length
- ESD area (bottom/top) begins at the front from 70 mm to end of board)

North America

Warwick, RI, USA
Tel +1.401.738.1722
San Diego, CA, USA
Tel +1.858.740.2400

Europe, Middle East & India

Straubenhardt, Germany
Tel +49 7082 794 0
Betschdorf, France
Tel +33 3 88 90 64 90
Warsaw, Poland
Tel +48 22 209 98 35
Hemel Hempstead, Great Britain
Tel +44 1442 24 04 71
Lainate, Italy
Tel +39 02 932 714 1
Dubai, United Arab Emirates
Tel +971 4 82 38 666
Bangalore, India
Tel +91 80 6715 8900
Istanbul, Turkey
Tel +90 541 368 0941

Asia Pacific

Shanghai, China
Tel +86 21 2412 6943
Singapore
Tel +65 6768 5800
Shin-Yokohama, Japan
Tel +81 45 476 0271

Our powerful portfolio of brands:

CADDY ERICO HOFFMAN RAYCHEM SCHROFF TRACER

nVent

nVent.com/SCHROFF

©2018 nVent. All nVent marks and logos are owned or licensed by nVent Services GmbH or its affiliates. All other trademarks are the property of their respective owners.
nVent reserves the right to change specifications without notice.